This is a digital copy of a book that was preserved for generations on library shelves before it was carefully scanned by Google as part of a project to make the world's books discoverable online.

It has survived long enough for the copyright to expire and the book to enter the public domain. A public domain book is one that was never subject to copyright or whose legal copyright term has expired. Whether a book is in the public domain may vary country to country. Public domain books are our gateways to the past, representing a wealth of history, culture and knowledge that's often difficult to discover.

Marks, notations and other marginalia present in the original volume will appear in this file - a reminder of this book's long journey from the publisher to a library and finally to you.

Usage guidelines

Google is proud to partner with libraries to digitize public domain materials and make them widely accessible. Public domain books belong to the public and we are merely their custodians. Nevertheless, this work is expensive, so in order to keep providing this resource, we have taken steps to prevent abuse by commercial parties, including placing technical restrictions on automated querying.

We also ask that you:

+ *Make non-commercial use of the files* We designed Google Book Search for use by individuals, and we request that you use these files for personal, non-commercial purposes.

+ *Refrain from automated querying* Do not send automated queries of any sort to Google's system: If you are conducting research on machine translation, optical character recognition or other areas where access to a large amount of text is helpful, please contact us. We encourage the use of public domain materials for these purposes and may be able to help.

+ *Maintain attribution* The Google "watermark" you see on each file is essential for informing people about this project and helping them find additional materials through Google Book Search. Please do not remove it.

+ *Keep it legal* Whatever your use, remember that you are responsible for ensuring that what you are doing is legal. Do not assume that just because we believe a book is in the public domain for users in the United States, that the work is also in the public domain for users in other countries. Whether a book is still in copyright varies from country to country, and we can't offer guidance on whether any specific use of any specific book is allowed. Please do not assume that a book's appearance in Google Book Search means it can be used in any manner anywhere in the world. Copyright infringement liability can be quite severe.

About Google Book Search

Google's mission is to organize the world's information and to make it universally accessible and useful. Google Book Search helps readers discover the world's books while helping authors and publishers reach new audiences. You can search through the full text of this book on the web at `http://books.google.com/`

UC-NRLF
$B 280 123

Air Brake Catechism

G. P. Conger

Twenty-Fourth Edition

Digitized by Google

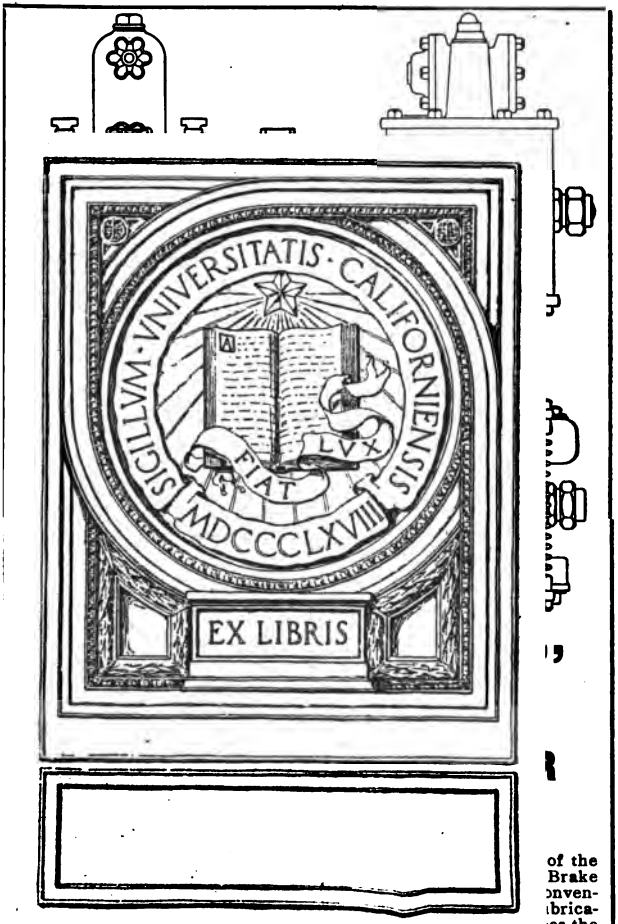

of the
Brake
onven-
ibrica-
es the
application of just the right quantity of oil at the right time. It's simple—consists of 3 features—the Emergency Valve "H" Sight Feed Fitting "K" Check Valve Connection "S." Approved and highly recommended by [illegible] experts. **Send for our Locomot[illegible] [illegible]nder Catalog and Instruction**

DETR[illegible] [illegible]OMPANY,

Digitized by Google

THE

Air Brake Catechism

AND

Instruction Book

On the Construction and Operation of

THE WESTINGHOUSE

AND

THE NEW YORK

AIR BRAKES

With a List of

Examination Questions for Enginemen and Trainmen

By

Copyright by C. B. Conger, Grand Rapids, Mich. 1910.

Twenty Fourth Edition

Digitized by Google

TF420
C7
1910

PREFACE

replacing
232021

24th Edition

In this enlarged edition of the Air Brake Catechism considerable new matter has been added which will prove of interest not only to those who are learning about the operation of the brake equipment from their own observation and experience, but to those who have the advantage of an instruction car with a regular instructor. This subject of self-instruction in all its details is so large that only a small part of it can be taken up in this little book, but the principal points are brought to notice.

The work done by the air brake operator in handling trains is becoming more skillful every year; he who wishes to keep up with the best practice must continually try to improve his work. This can only be done by learning and practicing the best methods. Bear in mind that good judgment is the first requisite for a successful air brakeman, the addition of knowledge of the construction so as to locate defects and their remedies, and correct methods of handling, to good judgment, will make a skillful man under all conditions.

At the present day every one connected with the working of the air brake is expected to pass regular examinations, and these examinations are getting more strict each year. The list of examination questions will call attention to points in the construction and handling of the brake which you should know if you wish to pass.

The construction and operation of the air pump, brake valve and triple valve, as far as it interests enginemen, is explained, the matter of repairs is not taken up.

All the new designs of locomotive and high duty car brakes of both Air Brake companies that are in general service at this date are explained in this Catechism.

Digitized by Google

INTRODUCTION

At the present day so much depends on the proper handling of the Automatic Brake that a definite knowledge is required from all men in train service of its operation when in good order, and how to locate defects or breakdowns, as well as how to avoid the difficulties arising from them.

This applies to the veteran as well as to the beginner. The changes in the mechanism, caused by the new and improved devices brought into service to take care of longer freight trains and faster passenger trains, as well as the devices for independent operation of the locomotive brake, call for study on the part of the men who have handled the brake for years, for a passenger train of moderate length equipped with ordinary triple valves and a long train with all high speed brakes are two widely different propositions, and the veteran looks for information on them. As for the beginner, he can not learn it all from experience, as no one is allowed to handle important trains until he has shown, either by an examination or by handling a moving train under the supervision of some man who can judge, that he has the necessary knowledge to properly operate the brake under all ordinary conditions.

This has brought about a demand for a clear and practical form of instruction in air brake practice, not so much to instruct the beginner on all the points as to put him in the way of learning them himself; and this introductory chapter is intended to help those who set out to learn the theory and have a chance to operate the brake or see it operated. This can best be done by learning the foundation principles first, studying the action of the important primary parts of the machine; the secondary parts will then work their way in so you understand the whole properly. Much time may be wasted by beginning at the

Digitized by Google

382110

wrong end to unravel air brake operations. If you are too hasty and jump at conclusions, you may be wrong; better not know anything about it than know it wrong. Therefore, take time enough at first to learn it right; you will never regret it.

There is nothing mysterious about the operation of the air brake. Each part has its own duty to perform. Take each part by itself and study it up, then get an idea of its relation to the other parts, and you will find out that it is easy. You cannot learn it all at once, or by once reading over an instruction book. In studying the construction and principle on which it operates, it is an advantage to have help from some one who can instruct you. When you come to operate it, the machinery in actual operation is the best instructor.

When you see the air brake working every day, sometimes making a good stop, at others not controlling the train as you think it should, the operation may seem mysterious, but it is governed by fixed laws of mechanics and forces. If you take pains to learn these laws and about the forces, and examine each part of the mechanism, it will be clear to you.

Attention is called to explanations of some of these operations in the succeeding pages of the Air Brake Catechism. Many of these operations are explained in more than one manner in connection with the movements of other parts of the apparatus.

In the first place, all the parts of the brake which are named in question 1 of the Catechism, are charged with compressed air, which comes from the air pump to the main reservoir, then through the ports in the brake valve into the brake pipe and triple valve, from there it passes through the feed port in the triple valve into the auxiliary reservoir provided for each complete brake. When the brake is ready to operate, the pressure is equal in the brake pipe, in the triple valve on both sides of the triple piston, and in the auxiliary reservoir. When you change the relation of these pressures in different parts of the

Digitized by Google

equipment, the effort the compressed air makes to equalize, by the high pressure air pushing against the low pressure air, moves the different parts of the air brake that can be moved in this manner away from the high pressures.

When it is once fixed in your mind what pressure you have in each place, and that any change of pressure will cause the movable parts of the valves to change their positions, closing some of the openings through which the air can pass and opening others, it is plain that the next step is to find out just what openings the air must pass through at each operation, whether applying or releasing the brake, always remembering that the high pressure air tries to flow into a space of lower pressure.

When studying the equalizing processes in the operation of compressed air equipment, remember that it is *air* that flows from one part of the equipment to another and *not pressure.* Pressure is only a condition, air is a substance or material. A substance can flow from one cavity or receptacle to another, but a condition can not flow through an opening. When compressed air flows from any part of the equipment to another, as from the auxiliary to the brake cylinder, it will change the conditions or pressure in these places, but the pressure does not flow either way.

It will take away much of the mystery of equalization if you will bear these facts in mind.

We will take up the plain triple valve first, as the process of equalization is best explained with it. You will notice in the cut on next page of the plain triple valve in the position for charging the auxiliary reservoir and exhausting the air from brake cylinder, that the triple piston *5* is the dividing line when the pressures are unequal; that the brake pipe pressure is against the lower side of this piston and auxiliary pressure on top. There is a small passage cut in the side of the cylinder around the piston, called a feed port, at *m,* through which air can pass from the brake pipe around the piston *5,* and up beside the slide valve *6* into the auxiliary at *Y,* when triple piston is clear up in release position; this is the opening

Digitized by Google

through which air can equalize in brake pipe and auxiliary. The piston acts as a valve to open and close this feed port. This port *m* is very small, and equalization takes place slowly through it. A brief explanation of the reasons for its small size is found farther along in the book.

As the auxiliary stores the compressed air used for applying its own brake, it must first be charged with a full

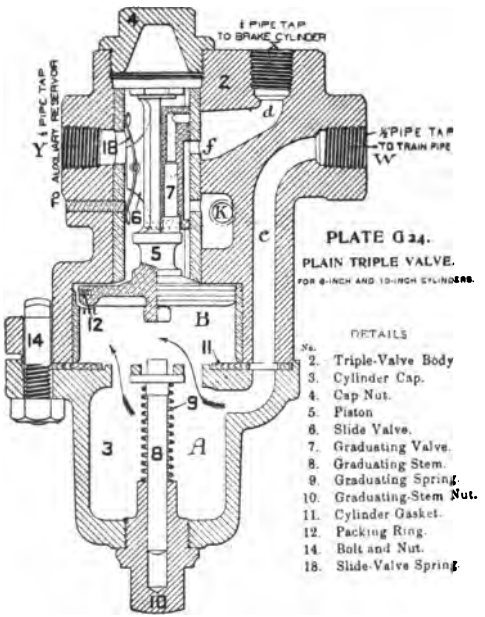

RELEASE AND EXHAUST POSITION.

supply of air; which will raise its pressure to the standard—usually 70 pounds—and it takes about a minute and 10 seconds for air enough to flow around the piston to equalize the pressure at 70 pounds. To apply the brake with a triple valve the brake pipe pressure must be reduced. As soon as any reduction of pressure is made in the brake pipe the auxiliary pressure will be greater and

force the triple piston down, following the decrease of pressure in brake pipe end of triple.

This first movement of the piston does not set the brake. There is some slack between the collar on the piston rod and the top of slide valve *6*—about five thirty-seconds of an inch—a very slight reduction of pressure under the piston moves it down the amount of this slack,

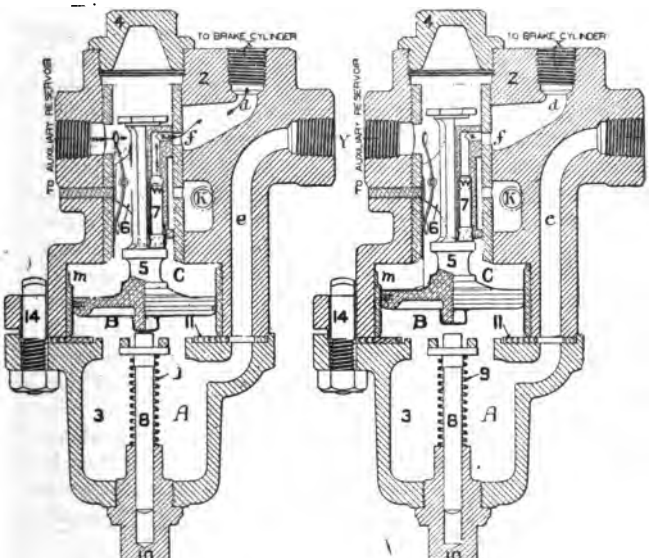

SERVICE APPLICATION. LAP POSITION.

closing feed port *m* and pulling graduating valve *7* off its seat in slide valve. As the slide valve has the auxiliary pressure holding it on its seat, more change of pressure under the piston is needed to move the slide valve—a point to remember when you move the triple valve to release position. When the piston comes down, bringing with it the slide valve, a port *z*, leading from the seat of graduating valve *7*, is opened to *f*, allowing the

Digitized by Google

auxiliary air to pass from the graduating valve into the brake cylinder. This also has a movable piston that pushes against levers which are so coupled up that the brake shoes are forced against the wheels. The operation of this triple piston with a moderate reduction of brake pipe pressure, say from 70 pounds down to 63, will show the exactness of this equalization principle.

When the triple piston *5* comes down, following a reduction of 7 pounds in the brake pipe (and the piston does not wait till the entire reduction of 7 pounds is made), and slide valve *6* and graduating valve *7* opens, the air in the auxiliary at 70 pounds begins to expand into the brake cylinder, as shown in cut of service application. As soon as enough air has gone into the cylinder to reduce the auxiliary pressure a little below 63 pounds, the brake pipe pressure is then greatest; hence triple piston moves up, also moving the graduating valve *7* and closing it. This cuts off the flow of air into the brake cylinder. As only a part of the full supply of air has passed into the brake cylinder, it sets the brake with a partial application and holds it set, for the piston does not move the slide valve *6* up and open the exhaust port *k* to air port *f*, as shown in cut of release position. For a more detailed statement of the operation of the graduating valve, see the answer to a question farther along in this book. Thus you see the triple piston moves between the brake pipe and auxiliary pressures, always towards the lesser one.

A graduating stem *8* and its spring *9*, in the bottom case of the triple, serve to stop the piston at a point in its travel where port *g* will be exactly opposite port *f*. This stem and spring are not moved in a *partial service* application, because when these ports are wide open the air will pass from the auxiliary to the cylinder as fast as it is going out of the brake pipe, this will reduce the auxiliary pressure as fast as the brake pipe pressure reduces.

If the relations between the pressures on either side of triple piston are changed, it will move toward the lower

Digitized by Google

pressure until the limit of its travel is reached, or until the relation between the pressures is changed the other way; this will stop its movement if pressures are equalized, or move it the other way if pressure is increased. Increasing the pressure in brake pipe side of triple over the auxiliary moves the triple piston clear up, moves the slide valve *6*, opens exhaust port *k* to air port *f*, allows

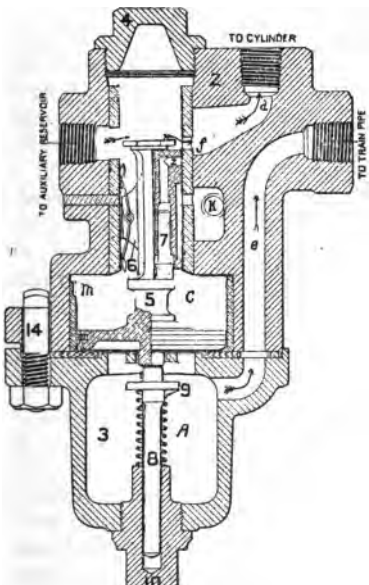

The plain triple valve moves to this position when the train pipe pressure is lower than the equalizing pressure of the cylinder and auxiliary either with a quick or a slow reduction.

EMERGENCY APPLICATION.

the air to escape from brake cylinder and releases the brake; so you see, charging up the brake pipe to standard pressure releases the brake. As the feed port *m* is also opened when the piston *5* is clear up, the air flows into auxiliary, equalizing its pressure with the brake pipe. To change the relations between the pressures in any other way is done by letting out some of the air—the train man

Digitized by Google

releases the brake by bleeding out the auxiliary pressure until it is lower than brake pipe pressure.

If a reduction of the brake pipe pressure of more than 20 pounds is made, as from 70 to below 50, the auxiliary pressure must also be reduced 20 pounds or more before it will allow the piston *5* to move up and close the graduating valve.

The brake cylinder is of such a size—if it has the proper piston travel—in proportion to the auxiliary reservoir that if air is allowed to flow from the auxiliary into the cylinder it will equalize in both of them at about five-sevenths of the original pressure, which is 50 pounds in case of 70 pounds originally. After this equalization has taken place no more reduction of pressure will be made in the reservoir, except by a leak or at the bleeder and the triple piston will move clear down to the position, which with a gradual service application is called full application position. This is the same as the emergency application position. You will notice the slide valve has uncovered the air port *f* so air can pass through freely and hold the brake cylinder pressure equal to the auxiliary pressure. The stud or post on the bottom of triple piston has pushed the graduating stem *8* down, compressing its spring *9*. This spring helps to stop the piston *5* at the proper place with a partial service application and assists in starting the piston up to release after a full application.

After thoroughly posting yourself on the way in which the plain triple operates by the reduction or equalization of pressures, you can then take up the engine equipment. It is a good plan to know just how the pump operates, its care and management, but that can be left till later; it is treated of farther along in this book. The pump generally goes ahead with its work from beginning to end of the trip without much attention from the engineer; the rest of the equipment depends on the skill and knowledge of the engineer for its successful operation, as it responds directly to his manipulation.

The brake valve controls the passage of air between the

Digitized by Google

main reservoir and brake pipe or brake pipe and the atmosphere.

The main reservoir air pressure is always in the top of the valve holding the rotary valve *13* on its seat; the brake pipe air is under the equalizing piston *17* at all times. The air over the piston can be called brake-valve air. Brake valve and brake pipe air can equalize when the rotary is on running position, and in full release. This is further explained in detail later on. The equalizing piston *17* is moved up, opening the discharge or brake pipe exhaust port *n*, or down, closing the port, by a change of pressure on either side, just the same as the triple piston. The presures are changed by opening or closing the various ports in the valve. Opening preliminary exhaust port *h* reduces the pressure over piston *17* so that brake pipe pressure raises the piston; brake pipe pressure reducing through port *n* brings piston down. The rotary *13* is moved by the engineer, its office is to put in communication the various openings or ports that will let the air pass through. Locate these ports, next find out just what they are for and in what positions of the rotary they are open and shut. The best way to do this, if you have no sectional valve to study on, is to get a complete valve for a few hours and dissect it, using a piece of fine copper wire to run through the ports, which will show the course of the air; this wire can be bent in any direction and its use is not likely to scratch the seats or valve. After locating all the ports through which main reservoir air can flow into brake pipe or the chamber D over piston *17*, then see in what position of the rotary all ports are covered, and figure out which ports are covered first and why it is necessary to stop the flow of air through them.

You will probably notice that before any ports are opened to allow air to escape from the brake pipe the main reservoir air is cut off from the brake pipe, so it can not supply the brake pipe while you are reducing that. Otherwise the triple valve would not feel any reduction of pressure and brake would not be set. Then when you come to

Digitized by Google

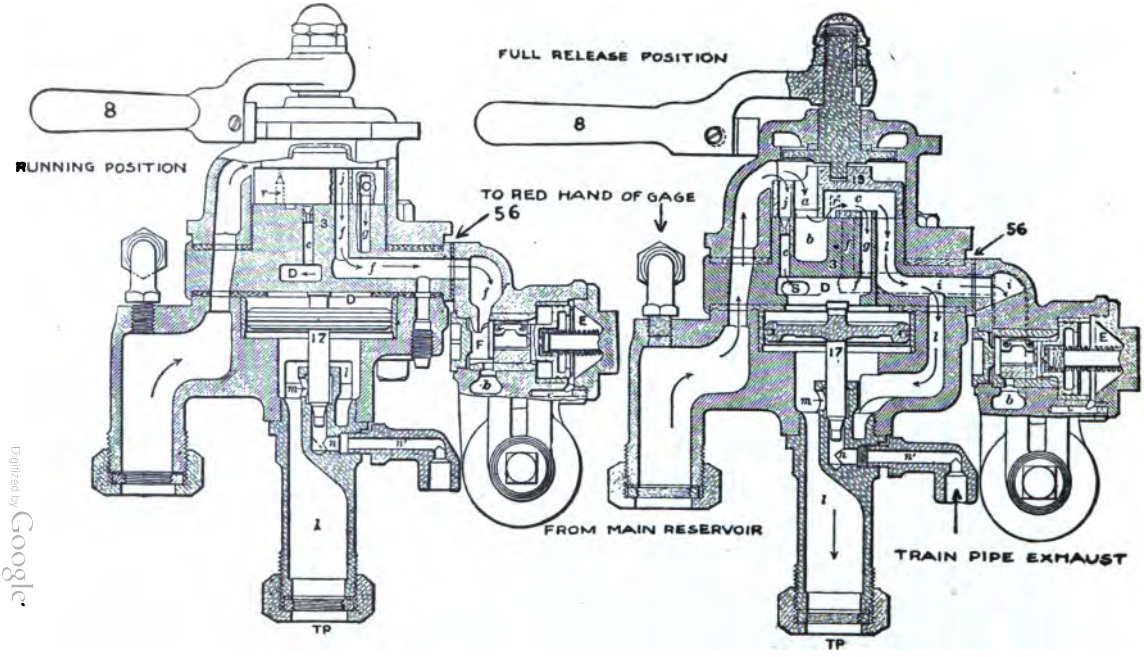

Digitized by Google

locate the ports that are opened to reduce the brake pipe pressure and actuate the triple, it will be necessary to know just exactly the principle of operation of the equalizing discharge valve.

On a long train the reduction of brake pipe pressure must be the same at each triple if we expect each brake to be set at the same time and with the same relative power. To make this reduction of pressure alike for all the triples, or what is the same, for all the cars in the train, we must allow the air to escape from the brake pipe gradually so the reduction will not be any more violent from the first car than from the last one, nor should the escape of air be closed till the same reduction has been made in each car. The discharge should not be stopped suddenly before the pressure in the last cars has equalized with the first ones, or the momentum of air flowing from rear cars, as well as equalizing pressures in all cars, will raise the brake pipe pressure in the cars nearest the brake valve and tend to release their brakes. This gradual closing of the brake pipe exhaust, the brake valve is intended to do automatically. Its principle of operation is, the engineer makes the proper reduction of pressure *in* the brake valve *over* the equalizing piston *17*, and the action of the piston *17* reduces the brake pipe pressure to an equal amount in all the cars, whether few or many.

Before you move the rotary far enough to open the preliminary exhaust port *h*, the equalizing port *g*, which allows brake pipe air to pass from brake pipe to chamber D, over piston *17*, is closed; this cuts off chamber D from any other pressure; you can then make a reduction on top of piston *17*, so brake pipe pressure will raise it up and hold discharge *n* open till the pressure below is a little less than it is above, when piston is moved down by the chamber D pressure, closing brake pipe discharge.

With the equalizing discharge valve, the black hand of the double gage is connected with chamber D at all times; if the rotary is in either full release or running

Digitized by Google

position the equalizing port *g* connects it to the brake pipe air so it shows that pressure also. When the brake is set with a service application, the pressures equalize so nearly on each side of piston at the instant brake pipe exhaust closes that the black hand is expected to show brake pipe pressure then also. In the emergency position the black hand does not at once show the amount of the reduction. You will find this further explained later.

If the packing ring in piston *17* leaks very much, the black hand will show brake pipe pressure when rotary is on lap, as the air pressures can equalize past this leaky packing ring; all of them leak a little. There is a leather gasket above this piston to prevent leakage during a service application, but not when the piston is in normal position. Look out for this defect when operating the brake. The brake valve reservoir is connected with the valve for the purpose of giving a larger volume of air to chamber D in order to insure a gradual reduction of pressure there.

Up to this point we will assume that the student has followed the action of the brake in a service or graduated application. There is what we call the emergency or quick action, produced by a different set of operations peculiar to the quick action triple valve only. We will go to the beginning and inquire why this action is necessary.

On a long train of air braked cars, to avoid a severe shock to the rear part of train when brakes are applied from the head end of train very suddenly, as by bursting a hose or breaking apart of the train, or in case of danger when it is necessary to set the brake from the engine very hard so as to stop as quickly as possible, the brakes should set on the rear cars quicky enough so the slack will not run up against head cars and damage cars or draft gear. Then, in case of danger, every second after the brake is applied at the engine before it begins to set on last cars and hold them, the train is getting nearer the danger; so a brake that can be set instantly on the whole train will stop the train quicker than one which sets slowly from car

Digitized by Google

to car. With the plain triples the air in brake pipe will be exhausted at one place only, either where an opening is made in brake pipe or at brake valve; this takes several seconds to affect the farthest car. If an opening can be made to exhaust this air at each car and reduce the brake pipe pressure, the action of the brakes on a long train can be made nearly simultaneous, so nearly so that the brakes are all set before the slack can run out. The quick action

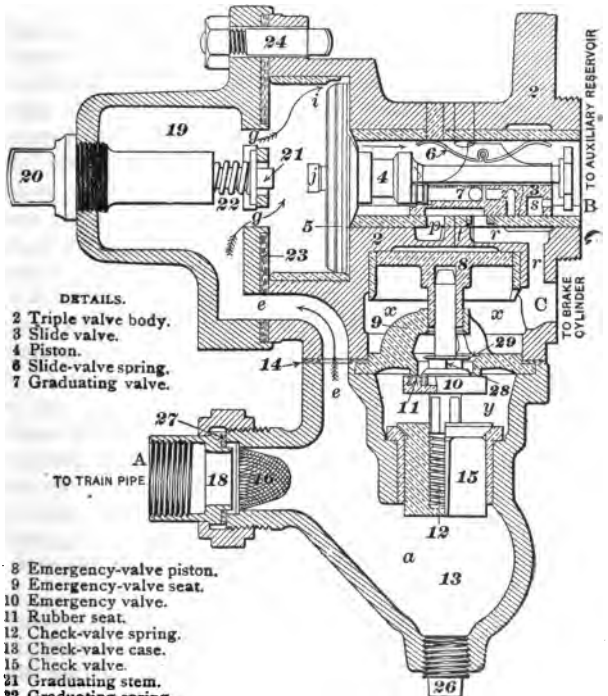

QUICK-ACTION TRIPLE VALVE—RELEASE POSITION.

triple is designed to exhaust a portion of the brake pipe air

Digitized by Google

at each triple, so as to set the next brake suddenly. To thoroughly understand how the quick action triple can exhaust some of the air from the brake pipe suddenly and reduce the pressure so as to affect the next triple in the same manner, it will be necessary to study the construction of the quick action valve. This triple has the same openings to admit air from the brake pipe to the auxiliary that we find in the plain triple. In the quick action triple they are shown at *e* through *g* and feed port *i*. But there is another channel for air to pass from the brake pipe into the brake cylinder in this valve, which is from the check valve case *13* into *y*, then into *x* and into brake cylinder at C. These openings are ordinarily kept closed to the passage of the air in either direction; the rubber seated emergency valve *10* keeps the brake pipe air from getting into the cylinder, and the check valve *15* keeps the air in brake cylinder from getting back into brake pipe. These two valves are held on their seats by a spring, shown at *12*, as well as by the air pressures. Now it follows that, if you wish this triple to make an opening to let the air out of brake pipe suddenly, this valve *10* must be moved away from its seat against the brake pipe pressure and the strain of the spring *12*. For this purpose piston *8* is used. A port *t*, which is shown just over the figure *8*, can be opened by the slide valve *3*, letting the air from the auxiliary on top of piston *8*; with auxiliary reservoir pressure over this piston and no pressure at all or a very low one below it, piston *8* goes down instantly, forcing valve *10* away from its seat. The brake pipe air then moves check *15* up and flows through C into brake cylinder till pressures equalize.

When these valves *10* and *15* are opened in this manner, the brake pipe air goes past them like a flash through the large ports into the empty brake cylinder, setting the brake with the pressure at which the brake pipe and brake cylinder can equalize, which is somewhere near 20 pounds. At the same time port *s*, in the end of slide valve *3*, is open, air from auxiliary flows through *r* and piles in on

Digitized by Google

top of brake pipe air in cylinder, raising the cylinder pressure at full equalization to 60 pounds. The brake pipe air equalizes *first* with cylinder, through large ports, and auxiliary pressure *last,* through small ports. Considerable air passes around piston *8,* which is not an air tight fit in its bushing.

Now for the means employed to let auxiliary reservoir pressure on top of piston *8* at one time to produce "quick action" and keep it out at another to preserve the graduated application. As long as this triple is used with a graduated application, slide valve *3* does not move over far enough to uncover emergency port *t,* as with a gradual reduction of brake pipe pressure auxiliary presure will be reduced equally with brake pipe pressure through the graduating valve *7* and its port *z.* The graduating stem *21* and its spring *22* ordinarily stop the movement of the piston *4* when it reaches the service application position. But if brake pipe pressure is reduced so suddenly and to such an amount that the graduating valve can not reduce auxiliary pressure equally with brake pipe reduction, and graduating spring does not stop the piston, the greater auxiliary pressure will move piston *4* and slide valve *3* far enough so port *t* will be uncovered, auxiliary air will move piston *8,* valves *10* and *15* will move at once and "quick action" is the result. The Westinghouse Co. have made a quick service triple valve that allows a small quantity of brake pipe air to flow into the brake cylinder during a service application and another type that uses air from a supplementary reservoir. These will be described later on in this book.

A sticky triple valve or any defect in valve *7* that will prevent air getting past it will cause quick action operation with a moderate service application if you have a *short train.* The equalization of pressures is the foundation principle to look for in the operation of the quick action triple.

It is necessary to restrict the flow of air through some of the openings in triples and brake valve in order to be

Digitized by Google

sure to handle a long train with safety. This refers more particularly to the "feed ports" in the triples for recharging auxiliaries, the "preliminary exhaust port" *h*, train pipe exhaust *n* and exhaust ports in triple valves. The proper size of these ports has been determined by the experience of many years.

Perhaps it would be well to study on the matter of equalization of different pressures of air in the equipment, as if this is well understood you can solve other problems in air brake operations more easily. It is the law that where compressed air in a certain sized vessel expands into an empty one, the pressure is reduced in the full one in proportion to the increased volume the air has to occupy. From this you can see that in the case of the brake cylinder and auxiliary the auxiliary pressure will be reduced more if the brake cylinder is large in proportion to the auxiliary than if it is small. Apply this law to the cylinders having different piston travels; a cylinder having a long piston travel holds a greater volume of air than the one with short travel, so we can expect the one with long travel to reduce the auxiliary pressure to a lower point than the short travel, and it is found that a travel of 11 inches of the freight brake piston gives a final equalized pressure of close to 45 pounds, while a short travel of 8 inches, which is between 4 and 11 inches, will give a final equalization of about 50 pounds. The difference of pressures with long and short piston travels is more marked with partial applications than with full equalization . A 5 pound reduction of auxiliary pressure will give about 18 pounds per inch on a piston with 4 inches travel; while with the 11-inch travel piston, the pressure will not show anything. This will give different brake powers on different cars in the train, although it should be equally proportioned to the weights of the cars; unequal brake power makes some cars hold less than others, so the strain is not equally distributed throughout the train, a point in equalization worth studying on.

The final point at which auxiliaries and their cylinders

Digitized by Google

equalize cuts quite a figure in operating the triples to release the brakes. A variation in piston travel of the different brakes changes this point of final equalization and will be explained later. As was stated in explaining the operation of the triple piston, the brake pipe pressure must be greater than the auxiliary pressure to move the triple piston up so slide valve will open exhaust port and let air in brake cylinder equalize with the atmosphere; then the brake piston will have no air pressure on either side of it. This relieves the strain on brake levers and shoes.

If auxiliary pressures on this final equalization are unequal and brake pipe pressure is not raised at once higher than the highest auxiliary pressure, all the brakes will not release at once. This leads us to consider the question of equalization of the train pipe and main reservoir pressures when you desire to release the brakes.

If the brake pipe is long it will take more air from main reservoir to equalize at a certain stated pressure than if it is short, for a long brake pipe holds more air than a short one. Then, again, if the brake pipe has considerable compressed air left in it after setting the brake, it will equalize at a higher point than if it is empty. This emphasizes the fact that it will be hard work to release the brakes on a long train if you exhaust all the air in making an application.

Another place where equalization is important is on the second application shortly after releasing brakes. It takes time for the brake pipe and auxiliary pressures to equalize. If you do not wait this proper time the auxiliary will not have charged to standard pressure, and, of course, when brake is set it will not reach as high a final pressure on brake piston, which reduces the braking power.

Equalization between brake pipe and auxiliary on making the reduction for a second application is very important, because if brake pipe has a high pressure which the auxiliary has not reached, the triple piston cannot move till the brake pipe pressure has been drawn down a

Digitized by Google

trifle lower than the auxiliary. If one is 80 and the other 60, it means a reduction of 20 pounds before brake begins to set, and about 20 more to set all brakes tight. This affects the work of the brake on a short train more than a long one. With a large main reservoir and a short train it is easily done.

This defective handling of the brake is called "overcharging the brake pipe," and can be avoided by returning the brake valve to lap from full release as soon as the brake pipe has had time to charge up its whole length, which will move all triples to exhaust position and quickly equalize the brake pipe and auxiliary pressures. When these pressures are equalized, a very slight reduction in the brake pipe pressure sets all the triples to work at once. In stopping a short passenger train for baggage or at a water plug, if the stop is being made too soon, go to a full release for an instant to move *all* the triples to release, then back to service application, making a service reduction of 6 or 8 pounds which will probably set the triples before all the air has passed out of brake cylinders, and in addition to holding the brake set at a low pressure will have all of them ready for a further application at an instant's notice so that you can stop at the exact spot required. Never try this with a long train of any kind at slow speed, as you are liable to break the train in two.

A few hints on getting ready to make a good stop and knowing whether you can depend on the brake to operate properly may be of service here.

When operating the brake valve, you should listen to the sound of the brake pipe air discharging from it, because the sound tells how many cars you have in your train with brake pipe connected and how the valve is doing its work, just as the exhaust of the locomotive tells whether the valve motion is in order; any unusual sound notifies you that something is wrong.

When you make a test of the train brake before starting out, make the same kind of an application as when stopping at a station, by successive reductions; a 5 to 7

Digitized by Google

pound reduction for the first one, lighter ones afterwards; then you will know how the brake will work when making station stops. It should be full application to get the full piston travel.

Never make an emergency application when testing brakes unless specially called for, and then not till *after* the first test has been finished.

If the brake leverage on the train is adjusted for 70 pounds train pressure, it is not safe to carry either more or less. If you carry less, you cannot stop quickly when you have to; if you carry more and skid the wheels, you will slide by and will spoil a lot of wheels. We will speak of this matter of leverage later on in connection with the High Speed Brake and L Triple.

Have your air gage properly placed and well lighted, so that it can be seen without taking your eyes too far off the track and signals. Consult it often till you learn the air brake business. If it does not register correctly or sticks when the pressure is changing, call the attention of the proper party to it.

It pays to inspect and test your engine equipment carefully before leaving the engine house; it may save you a failure on the road.

Drain the main reservoir daily; the distributing valve and the tender triple should be drained regularly in cold weather. It is a good plan to open the cocks at rear of tender and blow out the train pipes for both brake and signal line before coupling to the train.

Too much oil used in the air end of the pump does more harm than not enough, as it chokes up all the small openings in the engine equipment. The piston rod packing needs more oil than the air piston; the air valves do not need any. Use good valve oil always.

WHEN OPERATING THE AUTOMATIC BRAKE REMEMBER

That the compressed air stored in the main reservoir is

Digitized by Google

used to charge up the brake pipe and auxiliary reservoirs, and that it is used to release the brake. Do not have any water in any reservoir, as it takes up the room needed for air.

That the compressed air stored in auxiliary reservoir is used to set the brake. There is an independent supply for each brake. Keep a full supply in each auxiliary.

That the brake is set by any reduction of pressure in the brake pipe, no matter how it is made, if it is sufficient to move the triple piston and valve.

That the brake pipe pressure must be reduced 5 to 7 pounds at first application, or brake pistons will not travel over leakage grooves, allowing brake to leak off.

That the brake pipe pressure must be raised above the auxiliary pressure, or the auxiliary pressure reduced by bleeding, before the brake will release.

That you cannot recharge an auxiliary reservoir until the exhaust port in triple is wide open, unless air leaks past triple piston, as the feed port does not open until after the exhaust port is open.

That a second application after release does not set the brake as tight as the first full application, unless the auxiliaries have had time to recharge to standard pressure. This takes from 25 to 45 seconds.

That the small reservoir attached to brake valve is put there to give a larger supply of air for the preliminary exhaust of brake valve so you can make a gradual reduction.

That if your driver brake does not work quickly and hold well with service application, in ninety-nine times out of a hundred it is on account of a leak.

That the distributing valve used with the locomotive brake must be kept clean and all pipe joints tight if you expect to get good service from it.

That the position of the straight air brake valve and the independent brake valve has all to do with the application and release by the automatic brake valve of the locomotive brake.

Digitized by Google

That in all these questions and answers it is understood unless otherwise stated, that 70 pounds is the standard brake pipe and auxiliary pressure; 90 pounds main reservoir pressure; and 8 inches the standard piston travel for all passenger, freight and tender brake pistons. The brake piston travels an inch or more farther when train is running than with a standing test, so travel should be adjusted to less than 8 inches.

And lastly, we will define some of the terms which are used to shorten the explanations you may hear.

A PARTIAL application means that the brake is set with part of its full force; the brake cylinder pressure has not equalized with the auxiliary reservoir pressure.

A FULL application means that the brake cylinder pressure has equalized with the auxiliary pressure, and has, therefore, got the full pressure that can be obtained from the air stored in the auxiliary. Be sure to distinguish between a reduction and an application when telling any one how the brake worked. A reduction is allowing air to pass out of the train pipe whether the brake sets full or partially. No matter how many reductions of brake pipe pressure you make, it is only one application till it is released. You can reduce the brake pipe pressure a few pounds at a time and make eight or ten successive reductions, but it is only one application if it has not been released.

A GRADUATED OR SERVICE application means a gradual reduction of brake pipe pressure which sets the brake slowly. In a graduated application it is not expected that the quick action parts of any triple valve will operate.

An EMERGENCY application means a sudden and heavy enough reduction of brake pipe pressure to set the brake with full force at the first movement of the triple valve. With this application the quick action part of the triple valve operates, so that air from the brake pipe passes into the brake cylinder and equalizes, after which the auxiliary and cylinder pressures also equalize.

Digitized by Google

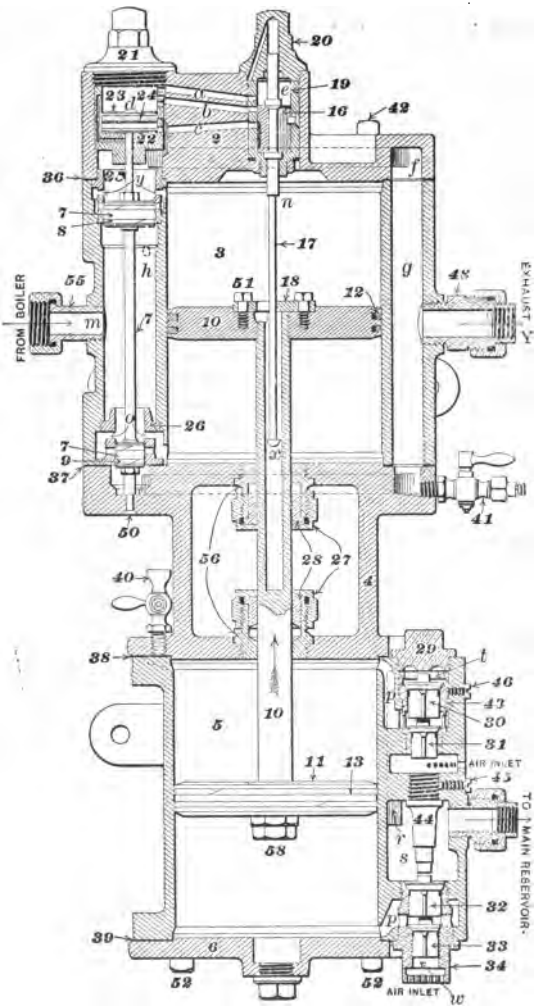

Digitized by Google

THE 8-INCH AIR PUMP

The sectional view of this pump shows the steam and air pistons 10 and 11 and all the steam valves in their positions when the steam piston is making its stroke upward.

The live steam comes from the boiler through the governor and passage *m* into the chamber between the heads of the main steam valve *7*. It also goes into port *h* and through a passage in the wall of the steam cylinder and in the top head, which is not shown as this port is in the section cut away. This passage from *h* leads live steam constantly into the steam chest *e* of the reversing valve *16*; it can pass through port *a* into the cylinder and over the reversing piston *23*, pushing it down; for the combined area of the piston *23* and the small one *7* is greater that that of the top one *7*. This opens the steam port in the bushing *26*; steam then passes under steam piston *10*.

At the same time the exhaust ports in bushing *25* are open so any steam in the top end of the cylinder escapes at *y* through *f* and *g* to the exhaust pipe. This moves the steam piston up, bringing up the air piston *11*. As the air piston moves up, any air above it escapes through port *p* by raising discharge valve *30* and passes into the main reservoir. At the same time the lower end of the air cylinder is filled with air from the atmosphere; when the piston *11* raises, a partial vacuum is formed under it and the pressure of the outside air forces up inlet valve *33* and air passes into cylinder. On the arrival of the piston at the top of its stroke, both these air valves, *30* and *33*, drop into their seats, remaining there during the return or down stroke. The other set of air valves open on the down stroke, *31* to admit air above the piston *32* to discharge air from the lower end of the air cylinder to the main reservoir.

Digitized by Google

When the steam piston reaches the top of its stroke, the reversing plate *18* strikes the shoulder *n* of the reversing rod *17*, moving it up; this in turn moves the reversing valve *16* up also. Reversing valve *16* being moved up in chamber *e* covers port *a* so live steam can no longer pass on top of reversing piston *23*; ports *b* and *c* are connected by the cavity in valve *16* so that the steam in cavity *d* over piston *23* exhausts through *c* and balances the pressure on each side of piston *23*. The top piston of main steam valve *7*, which has live steam under it, being larger than the bottom one and piston *23* being balanced, the main steam valve *7* is raised up, also moving up *23*; this movement of *7* opens the upper steam ports and the lower exhaust ports so that live steam pushes the piston *10* down to the bottom of the cylinder. When the piston reaches the bottom of the stroke, the reversing plate *18* catches on the button *x* at the bottom end of reversing rod *17* and moves the reversing valve back to the position shown in the cut; the live steam then moves the piston valves *23* and *7* to the positions shown there, and the pump is ready for the up stroke.

The first sectional view of the 9½-inch pump is shown with the main piston *65* and all the valves in the steam end as they stand when the pump is making the upward stroke. The live steam which comes up through passage *a* at the back of the pump into steam chest A is always on top of the main slide valve *83*. This valve is shown at the right hand end of its stroke, in which position it uncovers port *b* so steam can pass down to the bottom end of steam cylinder under the piston *65* and push it upward. At the same time the exhaust cavity of this slide valve *83* connects the port *c*, which opens into the top end of the steam cylinder, with exhaust port *d*, which passes down around the back of cylinder to the exhaust pipe; the steam above the piston can then pass into the exhaust. This slide valve *83* is moved by the differential piston valve *76*, with the large piston *77* on one end and the small piston *79* on the other. Chamber E is always connected to the exhaust

Digitized by Google

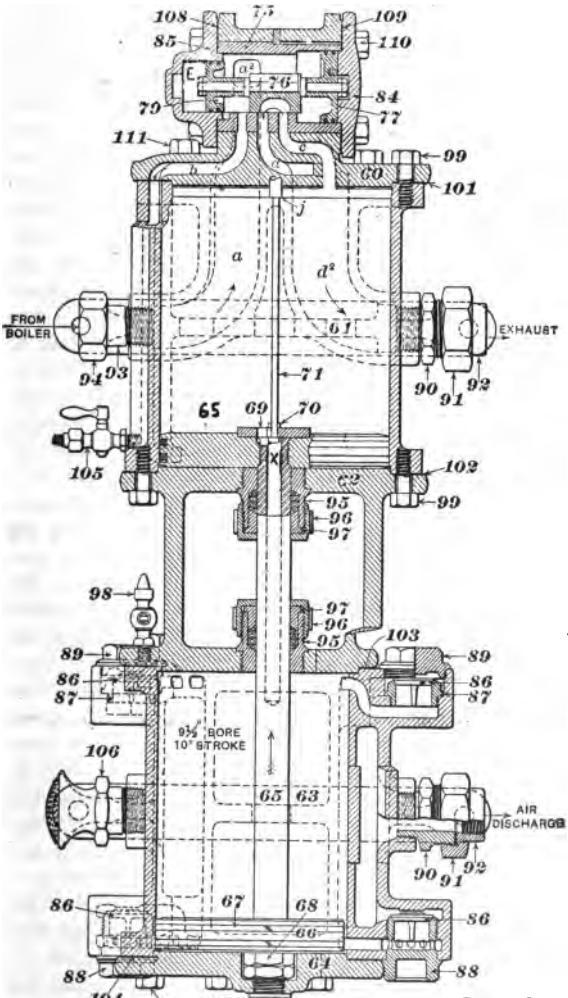

Digitized by Google

passage through port *t* in the side of the main valve bushing *75* so that this piston has live steam on the steam chest side and the exhaust on the other at all times. The large piston *77* on this valve *76* has live steam on the steam chest side and the office of the reversing valve *72* is to connect the chamber D at the outside end of *77* with the live steam or with the exhaust as may be required to move *76* back and forth. When D is connected with the exhaust both outside ends of the piston valve *76* have no pressure on them, the live steam between the heads moves *77*, which has the greatest area, away from the live steam pressure towards the right. When the main steam piston *65* approaches the top of its stroke the reversing plate *69* strikes the shoulder *j* of the reversing rod *71* which is moved up carrying the reversing valve *72* up; this admits steam into port *g*, it passes along the side of the bushing through the port shown into chamber D at the outside of piston *77*, which having live steam on both sides of it is balanced. Piston *79* has live steam inside and exhaust outside, so it moves away from the live steam drawing the main slide valve *83* with it. This movement uncovers port *c*, live steam passes down on top of the piston *65*, the exhaust cavity of *83* connects port *b* and exhaust port *d* together and the steam from bottom end of cylinder can pass up through passage or port *b* to the exhaust pipe. Steam piston *65* will then make the down stroke. The position of all the valves and pistons while the down stroke is being made is shown on next page. When close to the bottom end of the stroke, the reversing plate *69* catches the button *x* on the bottom end of reversing rod *71*, pulls this rod down and with it reversing valve *72*, and connects chamber D with the exhaust through ports *f* and *h* in the side of bushing *75*. As soon as the pressure is relieved, live steam moves piston *77* to the right, drawing the main slide valve *83* with it; all steam valves are then in the position shown on page 27, and the pump begins the upward stroke. The main valve *7* of the 8-inch pump has live steam between its two heads or pistons at the same

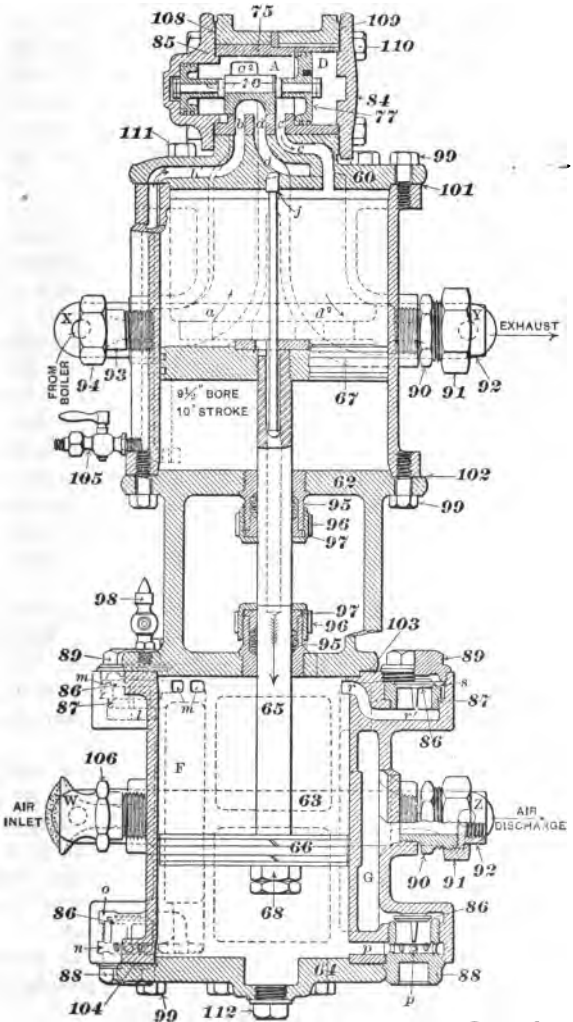

Digitized by Google

time and this tends to force the main valve up. Piston *23* is used to overcome the advantage the large piston *7* has and force it down for the up stroke of the piston *10*. With the 9½-inch pump the differential piston *76* is moved by changing the pressure on the outside of piston *77*; this is done by the reversing valve *72*. The angling hole in cap nuts *20* and *74* serves the same purpose in both pumps—to balance the pressure on both ends of the reversing rods;—this opening connects with the top end of steam cylinder, down past the reversing valve bushing. The reversing valve *72* in the 9½-inch pump performs the same office as valve *16* in the 8-inch pump, but the reversing valve *16* admits steam over the top of *16* through port *a* to piston *23*, while valve *72* admits steam *under* the bottom end through port *g* to piston *77*. In both pumps the reversing rods work the same and have the same class of troubles. The arrangement of the steam valves in the 9½-inch pump is much superior to that of the 8-inch in every way, and in addition they are all located in the top head *60*. In case the steam valves get out of order, by changing the steam head *60* with its reversing rod *71*, we get a good pump again.

The air valves in the 9½-inch pump are all of one size and have the same lift—three thirty-seconds of an inch; when new they are interchangeable with each other. The air valve cages *88* are also interchangeable. As these air valves act the same as those of the 8-inch pump when the pump is working, an explanation is not necessary.

This pump is 9½ inches bore and 10 inches stroke; with 140 pounds of steam it should fill a main reservoir 26½ inches in diameter by 34 inches long, having a capacity of about 15,000 cubic inches from 0 up to 70 pounds in 38 seconds, or from 20 to 70 pounds in 27 seconds. You can determine whether a 9½-inch pump is in good order by testing it and noting whether it can do this work.

An 8-inch pump should pump this amount of air from 0 to 70 pounds in 68 seconds, and from 20 to 70 pounds in about 50 seconds, using steam at 140 pounds.

Digitized by Google

The 11-inch pump is much the same in construction as the 9½-inch pump. It is 11 inches bore and 12 inches stroke. The air valves are much larger, but have the same lift, three thirty-seconds of an inch. Its operation is the same, so the explanation for one pump will do for the other. The capacity is much greater, as 100 strokes of the 11-inch pump will compress 48 cubic feet of free air, while 100 strokes of the 9½-inch pump will compress 36 cubic feet. When working at full capacity the 11-inch pump will compress 58 cubic feet of free air per minute and the 9½-inch pump 38 cubic feet.

The steam end of the pump is usually oiled by a sight feed cup, either a part of the engine cylinder cup or a small independent one. The air cylinder can be satisfactorily oiled by an attachment to the oil tank of the regular cylinder cup—see illustration and description on inside of front cover. This sight feed device is a down drop through air instead of an up drop through water. When operated, the regulating valve at the top is opened to feed a few drops at a time, not more than ten, and at such intervals as in the judgment of the engineer is required. It is not intended for a continuous feed, that is liable to give too much oil, this is as bad as not enough.

Digitized by Google

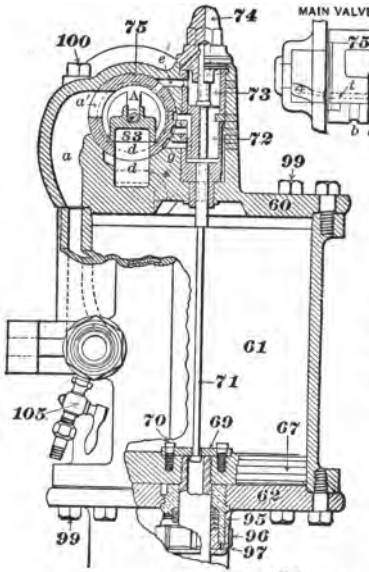

This cut shows the position of reversing valve 72 when pump is making the up stroke.

Port *g* in main valve bushing is for live steam to piston 77: *h* is port for exhaust from this piston; *f* connects with exhaust port *d*.

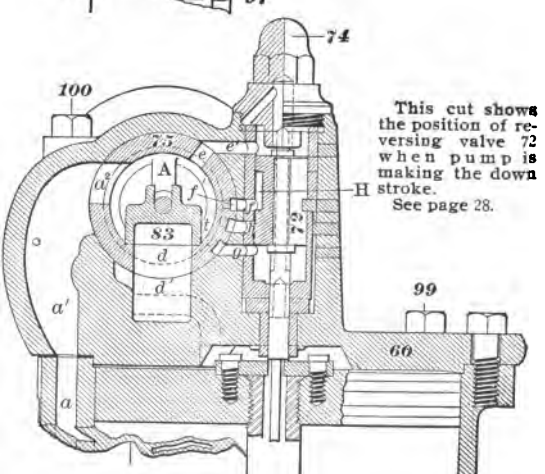

This cut shows the position of reversing valve 72 when pump is making the down stroke.

See page 28.

Digitized by Google

DEFECTS OF THE AIR PUMP

Many of the break-downs and defects of the air pump can not be remedied when away from the shop, some of them can; it is important to locate the nature of the defect at once to know if it can be fixed then and there, or if another air brake engine will be needed to handle the train as well as to be able to properly report the defect on the work book.

In the case of any disability or break down of the steam end the pump usually stops altogether. If the air end is out of order it will not make any air or at the best will work irregularly. We will first take up the disabilities which will make the 8-inch pump stop altogether. First see that a full supply of steam goes to the pump; if it does not the trouble may be in the governor.

Leaky gaskets in the steam head or leaks past the bushings from one port to another will let the live steam blow into the exhaust so there is not enough pressure to reverse the pump. In such cases you can hear the blow, the pump is pretty certain to stop at the bottom end of the stroke and stay there. If the copper gasket gets cracked at the opening where steam goes through from port *h* into the steam head the live steam can blow on one side into the exhaust, on the other into the steam cylinder; this leak does not always stop the pump, usually it does. If anything works into this port *h* and stops it up so steam can not pass through in sufficient volume to hold proper pressure for the reversing piston it will stop.

Leaks past the bushings are not unusual; when once they start, the steam soon finds a way to get to the exhaust without doing its work.

When the packing rings and valves in the steam end become worn the oil will blow into the exhaust before it has oiled all the moving parts. This will leave reversing piston 23 so dry that it will not move and reverse the position of main steam valve 7. This is a case where

Digitized by Google

increasing the feed of oil and jarring the steam head with a block of wood will usually start the pump.

A piston rod broken where it joins piston 23 will act much the same way; this rod has been known to get stuck in the bottom hole in the bushing and hold the piston down. The small hole starting in the side of this bushing running down and to the side of this piston rod is to oil this rod; if it gets stopped up it should be opened. Sometimes the top of reversing piston *23* will wear to a steam tight fit against the cap nut 21; this keeps the steam off the top of piston 23, it can not then push it and main steam valve 7 down. An examination of these surfaces, and if necessary nicking the smooth surfaces so the steam can get in, will remedy this.

When the reversing plate 18 gets loose, or the button *x* on the reversing valve rod 17 breaks off, the pump will reverse at the top end of its stroke, but not at the bottom and will stop at the bottom end of its stroke. If the steam is now shut off and the reversing valve allowed to settle down by gravity when the steam is turned on, the pump will make another double stroke and stop again. Taking off the cap nut 20 and raising up the reversing rod will show whether this is the trouble. In this case a spare rod 17 comes handy. If the plate 18 is loose the steam head will have to come off to get at the plate. If one of the nuts 58 holding the air piston on the piston rod works off, or a piece of it breaks off—these nuts split sometimes—and gets under the air piston so that it can not come clear down to move the reversing rod and valve properly, that will stop the pump. Take out the plug 59 in the bottom head of the air cylinder or the entire head, and this trouble can be located. If the nuts work off either end of main steam valve 7 the pump is liable to stop at once. If the stop pin 50 below the small piston 7 breaks off so the small piston gets below the bushing 26 and sticks, the pump will stop until this valve can be moved up.

Stoppage of the pump may be caused by an obstruction working into some of the small steam ports, closing

Digitized by Google

them up, especially port *h*. Taking off the cap nut 21 after steam has been shut off and all the valves settled down will locate this difficulty, as when all the passages are free the steam will come out through port *a* over the reversing piston 23. This same test will show whether governor is open for steam but is not as reliable as breaking the joint between the governor and pump. We will speak of the governor later on.

As the reversing rods, plates and valves are of the same pattern in the 11-inch, 8-inch and 9½-inch pumps, the failures of any of these parts affect all these pumps alike. With this exception the steam end of the 9½-inch pump gives very little trouble if the joints and gaskets are in good order.

Nearly all the blows of steam when the pump is at work take place when the steam piston is making the upward stroke. At that time the steam can blow past the steam piston packing rings for when on the down stroke the condensed water laying on top of this piston will prevent much steam getting by the rings; on the up stroke there is nothing of the kind to hold the steam back. On the up stroke live steam is on top of reversing piston 23 so it can blow into the exhaust, on the down stroke it is exhaust on both sides. With the differential piston 76 of the 9½-inch exhaust steam is on both ends on up stroke.

A blow past these main valves of either pump is so nearly like a blow past the steam piston that an examination is necessary to determine its location. A bad blow coming all at once is a good indication of a broken packing ring or a leak started through one of the copper gaskets.

If the top end of the reversing rod is not a steam tight fit in its cap nut in the 8-inch or 74 in the 9½-inch and 11-inch pump, steam will blow past there steadily on the up stroke; passing through the small hole drilled obliquely through the cap nut, then down past the reversing valve bushing and into the upper end of steam cylinder which on the up stroke is connected to the exhaust. It can not

Digitized by Google

blow on the down stroke, as at that time live steam is in the top end of the cylinder. Very few of these reversing rods are steam tight in the cap nuts. This opening between the steam space above the piston and top of cap nut is necessary to balance the pressures on the reversing rod so it will not move while the pump is making its stroke.

If the reversing rod gets bent so it catches on the reversing plate or the button catches on the side of the hole in the piston rod, the pump will reverse before it completes its stroke. A pump that reverses too soon in its stroke will pump very little air into the main reservoir.

A difficulty in the air end of the pump will usually give notice at once by a quick stroke one way and a slow stroke the other, which may be caused by several defects. If air from main reservoir leaks past a discharge valve it will fill that end of the cylinder with high pressure air so the air piston will move away from it quickly and towards it slowly. In such a case the inlet valve cannot lift—no air will be drawn in at that end. If the inlet valve leaks an examination will disclose it with the 8-inch pump. With the 9½ and 11-inch pumps it is not so easy, as the air passing out of one inlet valve will pass to the other and give it the signs of a poor suction there. Improper lift of valves will make a pump move faster one way than the other. If the lift of an inlet valve is too small, that end of the cylinder may not fill with air so the piston will not meet with so much resistance in compressing the air. If the lift of a delivery valve is too small the piston will move very slowly at the last part of the stroke; it has to wait for the compressed air to pass through the small discharge opening. It will show more difference in relative speed when the air pressure is low.

The lift of the receiving valves 31 and 33 of the 8-inch pump should be one-eighth of an inch, of the discharge valves 30 and 32 three thirty-seconds of an inch. This lift is very soon changed by the wear of the valves and the seats; too much lift of discharge valves will make the pump pound, as well as wasting main reservoir air by

Digitized by Google

allowing some of it to flow back into the cylinder before the valves can seat. To test for a leak in the bottom discharge valve, pump up full pressure, stop the pump, take out the plug in the bottom head—air will blow out there steadily from a leak. To test for a leak in top discharge valve leave this bottom plug out and open the oil cup on top end of cylinder; see if air blows out there steady; if so, it comes from top valve. You should have both ends open as the air might leak past piston packing and appear to come from the wrong end.

Leaky packing rings, leaky valves, choked air passages, all tend to make the pump run hot. Running the pump at too high a speed is generally the trouble in the first instance. When once it has been very hot the packing rings contract and do not fill the cylinder; the valve bushings leak and the oil burns on the inside of passages and make a bad matter worse.

The Westinghouse Company are now making a cross-compound air pump in which the high pressure steam piston operates the low pressure air piston; the steam when exhausted from this cylinder then passes across to the other end of the low pressure steam cylinder and operates the low pressure steam piston and the high pressure air piston. A diagrammatic view of this pump is shown; as by this means the steam and air passages can be more clearly traced. The reversing rod 21 and valve 22 are operated by the reversing plate 18 at the end of the stroke of the high pressure steam piston 7 in the same manner as the 9½-inch pump.

The first design of this pump had a differential piston and slide valve to open and close the steam and exhaust ports for the steam cylinders; very few of this pattern are in service. A later design has a piston valve instead of a differential piston and slide valve. This piston valve consists of five pistons, a large one at one end and a small one at the other that have the same duties as the differential pistons in the other pumps, between these two and pistons are three intermediate pistons of the same size

Digitized by Google

that open and close communication between the ports leading to and from the steam cylinders.

The same type of reversing valve is used, except that the exhaust cavity is near the top, in the old one it is near the bottom.

Steam from the boiler after passing the governor, comes in at the side, passes through port *a* up and across the steam head into ports *b* inside the large piston at one end and inside the small piston at the other; the diagrammatic view shows all these ports. Live steam also passes in at port *k* around the reversing valve 22.

As the high pressure steam piston must make at least one full stroke before any steam can pass into the low pressure cylinder, in this explanation we will consider that high pressure piston 7 has made its first up stroke moved the reversing valve to its top position and opened steam port *n* so live steam has passed into cylinder D and forced piston valve 25 to the left as shown; E at the small end is always in connection with the exhaust *e* through port *o*. Live steam now flows through port *c* on top of piston 7 forcing it down. Steam under piston 7 that moved it up in making the previous stroke can now pass through port *g* from the bottom of this cylinder up into cavity *i* between the first and second intermediate pistons, thence down through port *f* into the bottom of the low pressure cylinder under piston 8, forcing it up; any steam above this piston can escape through port *d* and cavity *h* between the second and third intermediate pistons into exhaust port *e* and the atmosphere.

When piston 7 is about to complete its down stroke it moves the reversing rod and valve down also, this closes port *n* and connects exhaust port *m* from cylinder D with the exhaust port *l* leading to *e* so the steam in D escapes to the exhaust, live steam pressure in cavity *b* at once moves piston 25 to the right connecting ports *c* and *d* through cavity *h*, the steam above piston 7 now passes in above piston 8, live steam from *b* flows through port *g* into the bottom end of high pressure cylinder and piston

Digitized by Google

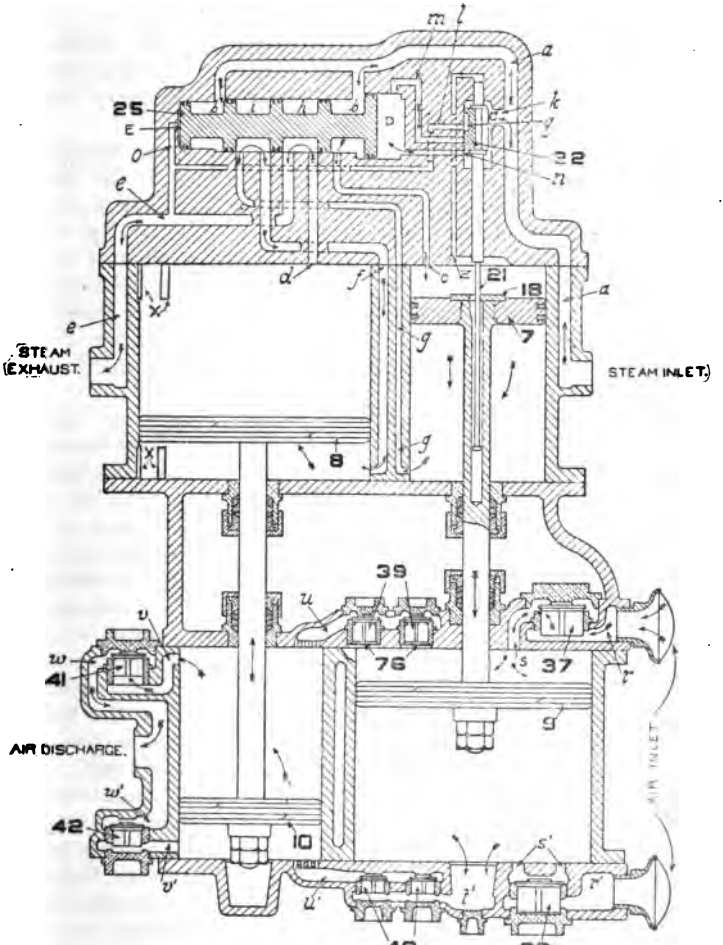

DIAGRAM OF THE CROSS COMPOUND PUMP, DOWN STROKE, HIGH-PRESSURE-STEAM SIDE.

Digitized by Google

7 makes the up stroke, piston 8 makes the corresponding down stroke, the steam below it escaping to the exhaust through port *f* and cavity *i* to *e*. Port *z* is a balancing port to equalize the pressure on the top and bottom of the reversing rod 21.

The low pressure steam cylinder has three by-pass grooves in it at each end that are open just as the low pressure piston completes its full stroke and allow steam to pass around the piston from the pressure side to the exhaust side of piston 8. The steam pistons move at the same time, but in opposite directions, the high pressure piston moves the reversing rod and valve so this piston must make a complete stroke each time to operate the piston valve 25 and change the course of the live and exhaust steam.

The course of the air through the air cylinders and valves from the atmosphere to the low pressure cylinder, then across into the high pressure air cylinder is shown by the small arrows pointing in the direction the air is flowing. When the low pressure air piston 9 made its up stroke any air above it was forced out past the upper intermediate valves 39 behind the moving high pressure piston 10 and air below piston 10 passes out by discharge valve 42 to the main reservoir. In the diagrammatic view low pressure air piston 9 is shown making the down stroke, air from the atmosphere is flowing in at the upper air inlet thence by the inlet valves 37 and port *s*, and filling the air cylinder behind the moving piston 9, intermediate valves 39 prevent any air coming back from the high pressure air cylinder. The air below piston 9 is now compressed till it will pass out through port *t* past intermediate valves 40 into the high pressure cylinder below piston 10 that is making its up stroke; the air above it is compressed till it exceeds the main reservoir pressure and raises discharge valve 41, passing out through *w* to the main reservoir.

The inlet and intermediate air valves are double, as 39 and 40 show, 37 and 38 being set the other way across

Digitized by Google

the pump; the sectional view shows only one of the pair. During the stroke of the pistons the intermediate pressure being that between the low and high pressure air pistons reaches about 40 pounds.

The high pressure steam piston 7 has a diameter of 8½ inches, low pressure steam piston 8 is 14½ inches; all pistons have a stroke of 12 inches. The low pressure air piston is 14½ inches and the high pressure air piston 9 inches in diameter.

The capacity of this pump is 131 cubic feet of free air per minute, as against 58 for the 11-inch pump working under the same condition.

THE PUMP GOVERNOR

The duty of the pump governor is to shut off the steam from the air pump when the air pressure has reached the standard desired. Where only one pressure is to be controlled, the single governor is used; if more than one pressure, the duplex governor is used. The steam valve and its air piston are the same with both the duplex and single governors, but one or two air tops are used, according to the number of air pressures controlled.

It is located close to the pump on the steam pipe, at the union connection 70 the air that operates the governor enters, and is under the diaphram 67. This diaphram is held down by the regulating spring 66, which can be adjusted by the regulating nut 65.

We will suppose that the spring 66 has been adjusted to hold the diaphram down against the air pressure of 90 pounds and no more. When the air pressure exceeds 90 pounds the diaphram will be raised against the resistance of the spring; this will raise the air valve, air will flow in on top of the air piston 53 and force it down, moving steam valve down to its seat and closing the steam supply to the pump, which will stop it.

As soon as the air pressure falls so the regulating spring 66 can move the diaphram down and close the air

Digitized by Google

valve the air pressure above the piston drops, and the steam valve is opened allowing the pump to take steam again. With the duplex governor the regulating spring of one air top can be adjusted for one pressure and the other spring for another pressure. Thus the pressure carried depends on which side of the governor is in operation.

There are several causes which will prevent the governor from shutting off the steam from the pump when the maximum air pressure is obtained. If the regulating spring is screwed down too tight it will not allow the diaphram to raise and lift the air valve off its seat. If too much oil is used in air end of pump the air valve gets gummed up where it rests on its seat so air can not get through after air valve raises. This is the most common cause of the pressure getting higher than the governor is set for. To cure this trouble take out diaphram and clean off air valve and its seat so air can get through freely when air valve raises. If the air leaks past piston as fast as it comes through air valve, the piston will not be moved down as there will be no pressure above piston. Putting in a tight packing ring cures this unless the cylinder is worn out of true. If the governor piston sticks so air pressure will not force it down, steam will not be shut off. If the waste pipe in the side of steam end of gov-

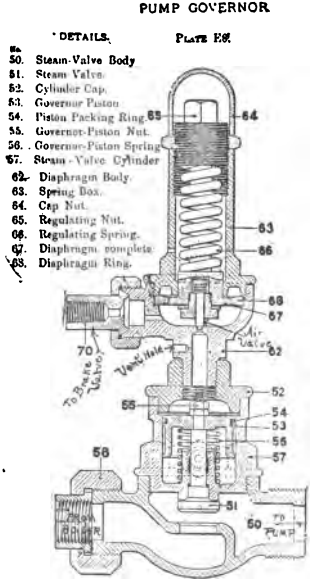

Digitized by Google

ernor is stopped up so steam or air is confined below piston, the governor will not shut off at any pressure. This waste pipe may be smashed out flat so nothing can pass through it, in cold weather it will freeze solid full at the bottom end which will keep the air piston held up. If anything gets in over diaphram so it cannot raise, that will hold air valve shut so air cannot get on piston to shut off steam valve. If valves and seats are kept clean, and all parts allowed to move as they should, governor will work accurately. In case the governor shuts off the steam with less than the standard pressure you are likely to find there is dirt or a scale holding the air valve off its seat so air can get through on top of piston steadily, in which case the governor will shut off steam as soon as air pressure on the top of governor piston will more than balance steam pressure on steam valve. If this air valve seat is injured so it leaks, or a new valve has been put in that is too short to make a good joint, a very low air pressure, less than forty pounds, will shut off the steam. A broken regulating spring will also do this.

Sometimes the pump will not start up soon after the air pressure in the governor has been reduced below that the governor diaphram is set at. This is because when the air valve closes, the air is shut up in cylinder over governor piston and must leak out before piston can raise and open steam valve. The old type of governor D-9 had this trouble, but the new style of governor E-8 has a small blow hole drilled in the side of 62, below air valve seat, which lets enough air escape after standard pressure is reached to keep pump running steadily.

To find if the trouble is in the governor when the pump will not start, open both drip cocks in the 9½-inch or 11-inch pumps, or break the joint between the governor and 8-inch pump; if live steam comes out freely the governor is not at fault. In such a case shut off steam at the boiler, wait a few seconds till steam is out of pump and turn it on again, if the live steam blows out freely, the trouble is in the pump.

Digitized by Google

With the single top governor and a brake valve using a feed valve to regulate the brake pipe pressure, main reservoir air is used to operate the governor, with some types of brake valves like the old D-8 or the N. Y. brake valve brake pipe pressure operates the governor. With the duplex governor one side is usually piped to the main reservoir direct, the other side, in some cases, uses brake pipe air. With the high speed brake, one side is set for 90 pounds, the main reservoir pressure used with the ordinary brake pipe pressure of 70 pounds; the other side for the higher pressure needed to release brakes, using 110 pounds. In such cases there is a stop cock in the 90 pound side air pipe, which is to be closed to cut out that side when the higher pressure is used. The N. Y. brake uses a triple governor.

There is also a method of piping which allows of two main reservoir pressures being used, one on release and running position of the F-6 brake valve and a higher one with the valve on lap and application positions. The 90 pound side is piped to the port *f* in the 1892 model brake valve at a point just above the figure 62—see the cut of this valve farther on. When the rotary is in full release or running position, main reservoir air can come freely into this port and operate the governor at a pressure of 90 pounds. During a brake application this port *f* is closed by the rotary and the air pressure there soon equalizes with the brake pipe.

The 90 pound side of the governor does not then control the pump and the high pressure side which is connected directly to the main reservoir and adjusted for a pressure higher than 90 pounds, usually 110 pounds, allows the pump to run and raise the main reservoir pressure so as to have a good stiff excess to release brakes.

There is also a method of piping the S F duplex governor with the E. T. brake to control the amount of excess pressure regardless of what the brake pipe pressure may be. One side is piped to the main reservoir direct at MR, and set 120 or 130 pounds, according to what the

Digitized by Google

maximum main reservoir pressure is to be. The other side has a light spring 27 over the diaphram that has the proper tension to hold the diaphram 21 down for the

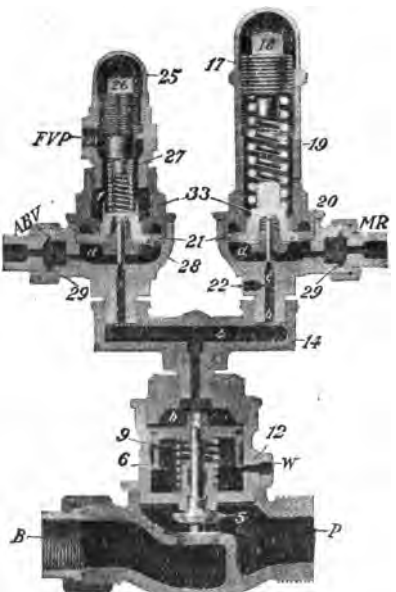

THE SF-4 PUMP GOVERNOR

excess desired. At A B V main reservoir air from the brake valve comes in under the diaphram at *d* from the automatic brake valve in full release, running and holding positions. The position of the brake valve regulates the flow of air to the excess pressure side. At FVP feed valve air at the reduced pressure comes in above the diaphram, and its pressure is added to that of the spring 27 so that we have 70 pounds brake pipe plus that of the spring—say 20 pounds—so that when the main reservoir air in *d*

Digitized by Google

can overbalance the presure of 70+20 above the diaphram, the diaphram will raise the pin valve and admit air over the governor piston and close the steam valve 5. This will operate the same at any other brake pipe pressure; so there will be the same excess, depending on the adjustment of the spring 27. Air passes in at ABV only in release, running and holding positions of the type H brake valve. When the brake valve is moved to lap or beyond the air is cut off from under the diaphram at *d* and the pressure at *a* and spring 19 control the pump.

A peculiarity of operation of this governor is that when charging up a long train through the brake valve in running position, if there is more than 20 pounds difference between main reservoir and brake pipe pressures the governor will stop the pump. In such a case put the brake valve in full release and the pump will soon start.

Digitized by Google

AIR BRAKE CATECHISM

1. Q. What are the essential parts of the automatic brake and what service does each part perform?

A. The air pump, the main reservoir, the engineer's brake valves, automatic, independent and straight air, the brake pipe with its hose, couplings, and angle cocks, the auxiliary reservoir, the triple valve, the brake cylinder, the gage and the pump governor. The air pump compresses the air for setting and releasing the brake; the main reservoir is used to store a supply of air for charging the brake pipe and auxiliary reservoirs when empty, as well as to hold the supply for increasing the brake pipe pressure when the brake is to be released and to charge the brake pipe and auxiliaries ready for the next application; the automatic brake valve governs the passage of the air from the main reservoir to the brake pipe, from the brake pipe to the atmosphere, or stops the flow of air through it in any direction. The brake can be set gradually or full on, held set or released, when this valve is properly handled by the engineer. The feed valve controls the supply of air to the brake pipe in running position of brake valve and regulates its pressure; the straight air brake valve passes main reservoir air, reduced to 45 pounds, to and from the brake cylinders direct. The brake pipe, with its hose and couplings, extends from the brake valve to the last air brake car, and supplies each auxiliary reservoir with air for setting the brake. It is also a means of communication from the engineer's brake valve to each triple valve, and from one triple valve to another in the quick action or emergency application.

Each brake has an auxiliary reservoir in which the air is stored for operating it to set. The triple valve consists of three separate valves and is connected to the brake pipe, auxiliary and brake cylinder; it is used to control the charging of the auxiliary with air and regulate the time

Digitized by Google

in which this is done, to open a valve to admit air from auxiliary to brake cylinder to set the brake, or by another movement to close this valve and open the exhaust port so air can get out of brake cylinder to the atmosphere and release the brake. Thus the functions of the triple valve are three-fold, to charge the auxiliary, set the brake and release it. The triple valve is operated by a variation of pressures between the brake pipe and auxiliary; this variation is controlled by the brake valve. The brake cylinder, with its piston connected to the brake levers, beams and shoes, sets the brake when the triple valve lets air into it. The gage shows with the red hand main reservoir pressure, with black hand pressure in the brake valve above the equalizing piston and in brake valve reservoir; when brake valve is in full release, running, or holding position it also shows brake pipe pressure. The pump governor is located in the steam pipe to pump; it is operated by air pressure and shuts off steam from the pump when the air pressure reaches the standard amount carried.

In addition to these essential parts there is the pressure retaining valve that is attached to the exhaust outlet of the triple valve and controls the flow of air away from the brake cylinder when the triple valve is in release position; the conductor's valve that when opened reduces the brake pipe pressure and applies the brake, the release valve or bleeder connected to the auxiliary reservoir used to reduce the auxiliary pressure and release a single brake. A separate valve and its reservoir called the distributing valve is used on locomotives and performs the duties of the triple valve by applying and releasing the locomotive brake. A high speed reducing valve is used on coaches.

2. Q. What are the duties of an engineer as to his air brake equipment when leaving the roundhouse?

A. To start his pump slowly and increase its speed after 15 or 20 pounds of air have picked up; to be sure that pump is in good order and will pump a full supply of air promptly; to know that governor shuts off the pump when the proper pressure is reached and not before,

Digitized by Google

and allows it to start promptly; to see that lubricator has oil enough in it for the trip; to know that there is no water in the main reservoir, drain cup, triple valves, auxiliary reservoirs or distributing valve, to test all joints in piping, also brake valve and triple valves for leaks, and have leaks made tight; to see that tender and driver brake pistons have the proper travel and do not leak off when set; to test the air signal if one is used.

3. Q. Why must the pump be started slowly, oil used cautiously, triple valves, reservoirs and tender strainers be drained, and how often?

A. The pump must be started slowly to allow the condensed water to get out of steam end, and run slowly till the air pressure rises, or the piston will strike the heads of air cylinder. The triple valves, reservoirs and strainers, or drain cups, should be drained every day in cold weather, once a week in warm weather. Oil should be used sparingly in air end of pump. It should never be put in through the air inlets of the pump, as it soon collects dirt and chokes up the air passages, which helps to make the pump run hot.

4. Q. How do you test for leaks in the engine equipment?

A. When full pressure is obtained—70 in brake pipe, 90 in main reservoir—shut off pump, place valve on lap; if red hand drops and black hand is stationary, it is a sign of a leak somewhere in main reservoir line, which begins at valves in pump and ends at brake valve. It may be in joints of piping, in main reservoir drip plug, in the air signal line, in valves of pump or brake valve. If there is an air sander or air bell ringer on the engine their valves are liable to leak. If main reservoir pressure falls rapidly when you are sure it is not going into brake pipe under rotary, examine each of the places mentioned. With the use of the cut-out cock under brake valve a leak under rotary is soon detected. Set the brake full on, place the valve on lap, shut the cut-out cock; if rotary leaks into brake pipe the black hand will soon show same pressure

Digitized by Google

red one does; if rotary is tight and air leaks out of brake pipe the black hand will drop. With a leak in brake pipe of engine or tender and cut-out cock shut, the brake will set with valve on lap, and cut-out cock open the black hand will fall slowly. For a leak in signal line shut the cut-out cock next the reducing valve; a leak here will make the whistle blow. Using a torch or putting soapsuds on a suspected leak will generally locate air blowing out there.

5. Q. Why must there be no leaks in your brake pipe or any other part of your air brake supply?

A. If brake pipe leaks, brake will continue to set tighter when brake valve is put on lap, and stop the train before you want it to, so that it is necessary to let it off and make another application for an ordinary stop. If cars are cut off from engine, they must be bled at once if their brake pipe or angle cocks leak. Brake pipes sometimes get worn through where they rest or rub against something, so they are tight when standing still and leak when moving or shaken around. This leak sets the brake when train is in motion, and no leak can be heard when standing still. Jar the pipes a little when inspecting the engine to locate this leak. Sometimes the brake levers strike the end of plug in stop cock and push it in so it will leak when brake is applied.

6. Q. Why must all hose couplings be hung up properly when not in use? Why should they always be blown out at rear of tender before uniting to other couplings? What is the difference between an air brake and an air signal coupling?

A. So no dirt or foreign matter will get into the open coupling and work into the triple or brake valve or stop up strainers. So couplings and gaskets will not get injured or broken dragging over rails and crossings. If blown out each time, any water, sand or dirt in the tender piping will be blown out. Air brake and air signal couplings are of different sizes—made so purposely—so the brake line cannot be coupled to the signal line. The opening and lip

Digitized by Google

of the lock in brake coupling is much wider than the signal coupling, so the brake coupling will not go into it. It is the practice to paint the signal couplings red so they are more easily distinguished when taking hold of them to couple up.

7. Q. If main reservoir has water in it, how will it affect the operation of the brake?

A. The water in main reservoir reduces the supply of air stored there in proportion to the amount of water contained. The brake will set the same, but on a long train will not release as readily, as there will not be enough air stored to recharge the brake pipe quickly and you must wait to have it pumped. The main reservoir should be entirely clear of water, even if it is necessary to drain it each trip, so as to get a prompt release and recharging of train.

8. Q. How does this water get into the main reservoir?

A. The air from the atmosphere before compression contains more or less moisture in the shape of vapor. After compression the air can not hold all this vapor as it is compressed to a very much smaller volume, so nearly all the vapor falls to the bottom of the main reservoir as solid water as soon as the air cools off to the normal temperature of the outside air. If the pump runs hot so the air does not cool off in the main reservoir some of the water will be found in the triple valves and drain cups.

9. Q. Of what use is the extra main reservoir pressure, and does the size of the reservoir have anything to do with the amount of excess pressure you carry?

A. It recharges the brake pipe and forces the triple pistons up into exhaust position quicker and surer, so that all brakes release about the same instant; recharges the auxiliary to full pressure in less time, ready for the next application. With a large main reservoir there is a greater volume of compressed air stored to draw from, so a less number of pounds of excess pressure will do the work than with a small reservoir. With a short tr-

Digitized by Google

good work can be done with less excess than on a long train. Excess pressure, as well as a large volume of stored air, is needed on a long train, so the air will travel from the engine to the rear car more quickly and release the rear brakes at nearly the same instant the front ones release; this will avoid many break-in-twos. Excess is needed to release brakes and large volume to hold up the pressure in brake pipe for recharging. The main reservoir should always be drained of water so it will be full sized.

10. Q. Could it release the brakes with an empty brake pipe as readily as when the pressure in the brake pipe had been reduced only 20 or 25 pounds? Why?

A. No. When the air from the main reservoir expands into an empty brake pipe, it will not fill it up and equalize at as high a pressure as when the brake pipe has some compressed air left in it. For instance, the brake pipe line of 25 freight cars holds 16,000 cubic inches, about as many cubic inches of air as an ordinary main reservoir. If this brake pipe is entirely empty and the main reservoir has 90 pounds, it will equalize into twice the space, and show half the pressure, or 45 pounds in each. The brake would be set at 50 pounds; with that pressure above triple piston, brakes could not release until the pump had raised the pressure over five pounds. Now, if the brake pipe line has been reduced 25 pounds, having 45 pounds still left in it, 90 in main reservoir and 45 in brake pipe, would equalize at a little over 65, which would raise triple pistons so brakes would release promptly.

11. Q. Would you run your pump as fast to recharge an empty brake pipe as one with 45 or 50 pounds in it? Is there any economy in retaining as much air as possible and keeping the pump cool?

A. The pump would have to run faster to recharge an empty brake pipe than one with 45 or 50 pounds in it. When you empty the brake pipe of 25 cars it wastes as much air as when you empty a small main reservoir; smaller trains in proportion. This would make some

Digitized by Google

pumps hot to supply. Always save your air and keep the pump cool, no matter what length of train you handle.

12. Q. Please explain what excess pressure is.

A. Excess pressure is the difference between the main reservoir and brake pipe pressures when the brake valve is in running position so that the excess valve or the feed valve can maintain a difference between the two pressures. In full release position these valves are cut out, but the air can pass through an open port from the main reservoir to the brake pipe and equalize, so in release position there is no excess. If you carry excess you aim to prevent this equalization and thus have a greater amount of air in main reservoir to equalize into brake pipe when necessary to release brakes. Of course it takes more excess to promptly release all the brakes on a long train than a short one. When releasing brake, it supplies the brake pipe with a higher pressure than brake was first set at; this makes the movement of all triples to release position much quicker and surer. With a long train it is absolutely necessary for this purpose. On a long train excess is needed to force the air back through brake pipe quickly and release brakes, with large volume to hold the pressure up. It recharges the auxiliaries quicker, ready for the next application of the brake. It charges empty cars quicker that are taken on the train. When brakes "creep on," they can be released at once by placing the brake valve on full release for a second or two, just long enough to raise the triple to exhaust position and not long enough to charge the reservoirs to a higher pressure, then returning it to running position.

13. Q. Have we more than one pattern of equalizing discharge brake valve?

A. Yes, we have several kinds of them in service, called E-6, or F-6, D-8, H-5, and H-6, from the number of the plate on which each is illustrated in the Westinghouse catalogue. The E-6 and F-6 valves are exactly alike and are now known as the "1892 model" or F-6 valve. Very few of the D-8 valves are now in ser

Digitized by Google

The H-5 and H-6 brake valves came next after the F-6 or 1892 model, and may be styled the 1906 model.

14. Q. Describe the principle on which it operates and what difference there is between the patterns.

A. This brake valve has a rotary valve with various ports and cavities in it by which the air can pass to and from the various pipes and connections when the engineer moves the rotary. It also has a piston in it called the equalizing piston, with a brake pipe exhaust valve on the bottom side of it which is designed to automatically reduce the brake pipe pressure. When brake valve is not being operated this piston has an equal pressure on both sides of it, so it remains stationary, holding brake pipe exhaust valve closed. When it is used to set the brake, the reduction of air pressure is not made by the engineer direct from the brake pipe, but from the chamber in the valve over the equalizing piston and the small reservoir connected to the chamber. If the engineer wishes to reduce the brake pipe pressure any specified amount—say seven pounds—he moves the rotary to service application position. As the rotary passes lap position, the ports which allow the air to pass from one part of the brake valve to another are all closed. The main reservoir air is held on top of the rotary as it is not used when the brake is set, but only when releasing or charging the brake pipe and auxiliary reservoirs. The air above the equalizing piston and the brake valve reservoir being cut off from all other air may be called brake valve air, it is what operates the automatic part of the brake valve to equalize the discharge of the brake pipe air, which is below the piston. When the pressure of the brake valve air is reduced by allowing some of it to escape from the preliminary exhaust port, it does not reduce the brake pipe air through the same opening; so the equalizing piston having less pressure above it, raises up, opening the brake pipe exhaust valve on the bottom of this piston and air flows out of the brake pipe. As soon as the brake ir is reduced the amount the engineer wishes (and

Digitized by Google

the amount of the reduction is shown with the black hand of gage) he closes the preliminary exhaust port by a movement of the rotary to lap. The pressure of the brake valve air then remains stationary; while the brake pipe air flows out through the brake pipe exhaust till it is reduced a little lower than the brake valve air, which then moves the piston down gradually and closes the brake pipe

EQUALIZING DISCHARGE VALVE

WITH FEED VALVE ATTACHMENT.

1892 MODEL.

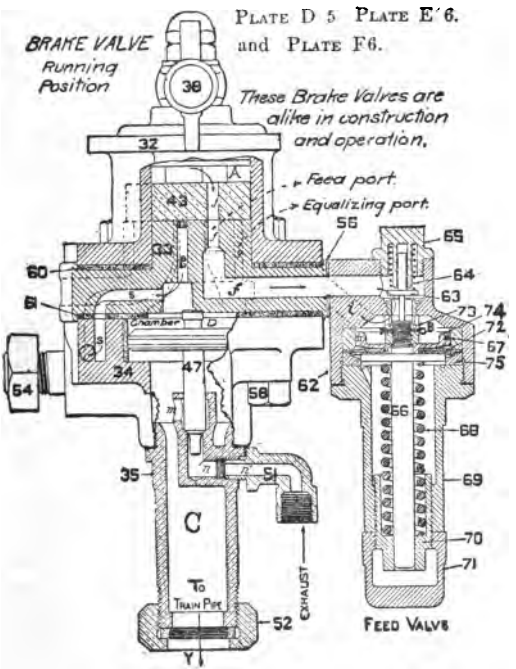

exhaust. It takes longer to reduce pressure in a long brake pipe than in a short one through the small brake pipe exhaust port because of the greater volume of a

Digitized by Google

the long pipe, so the brake pipe exhaust is held open by the brake pipe air till the pressure is reduced the whole length, then closed automatically by the pressure of the brake valve air.

Each of these valves uses a double hand gage and has a small reservoir about 12 inches long connected to it by

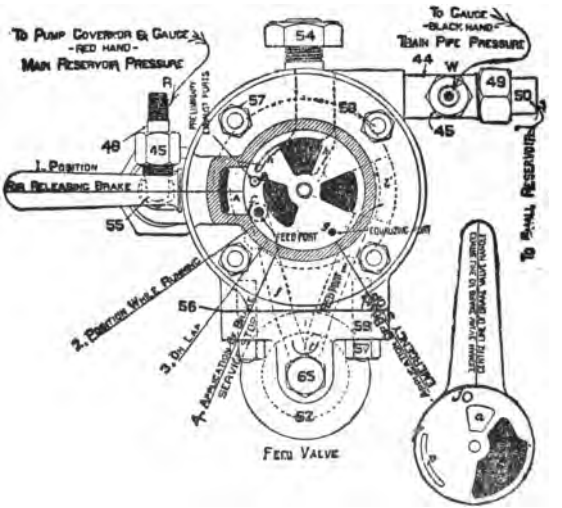

a small pipe; this equalizing reservoir is used to supply the cavity over equalizing piston with a larger volume of air, so a more gradual reduction of pressure can be made through the preliminary exhaust port from this cavity. The later size of this reservoir is 14½ inches long; it contains a larger volume of air than those first used and thus makes the reduction of brake valve air more gradual.

The F-6 has a reducing or feed valve attached, which is set to regulate the brake pipe pressure at not over 70 pounds, at which pressure it closes and no more air can pass to brake pipe from main reservoir till the brake pipe pressure falls below what the feed valve is set at, when it

Digitized by Google

opens again; with this valve the governor is piped to main reservoir and set at ninety pounds.

Either of these valves when placed on emergency position opens a large port which lets the air from the brake pipe direct to the atmosphere, making a sudden reduction, which causes the brake to go on suddenly and with full force.

15. Q. Describe the feed valve or brake pipe pressure regulator. How many kinds are in use and what are the differences in their operation?

A. There are three forms of the feed valve in general use. The older one, called F-6, has a poppet valve, 63, which is opened and closed by the movement of a piston, 74, which piston is moved in one direction, *down,* by the pressure of the brake pipe air, and *up* by a regulating spring, 68.

When the feed valve 63 is open, as shown in the illustration, the main reservoir air which comes from the brake valve when in running position, comes through *f,* passes by valve 63 into cavity *B,* as shown by the arrow, and out through port *i* into the brake pipe. Piston 74 is held up against the brake pipe pressure in *B* by the regulating spring 68, which is adjusted to hold the piston up so the supply valve will not close till the pressure reaches the standard amount, usually seventy pounds; at which pressure the piston is moved down far enough to allow valve 63 to close on its seat and shut off the supply of main reservoir air passing into the brake pipe.

If from any cause the brake pipe pressure is reduced below the standard amount, the regulating spring pushes the piston and valve 63 up, so that air passes from the main reservoir to the brake pipe. This action of the feed valve maintains the pressure in the brake pipe at the standard amount steadily, provided there is enough in the main reservoir.

The brake pipe pressure begins to move the piston down against the stiffness of the regulating spring at about forty-five pounds, so that valve 63 begins to close a

Digitized by Google

at that pressure. As the pressure increases it compresses the spring more, until at seventy pounds piston 74 is down so the valve 63 has entirely closed. On account of this

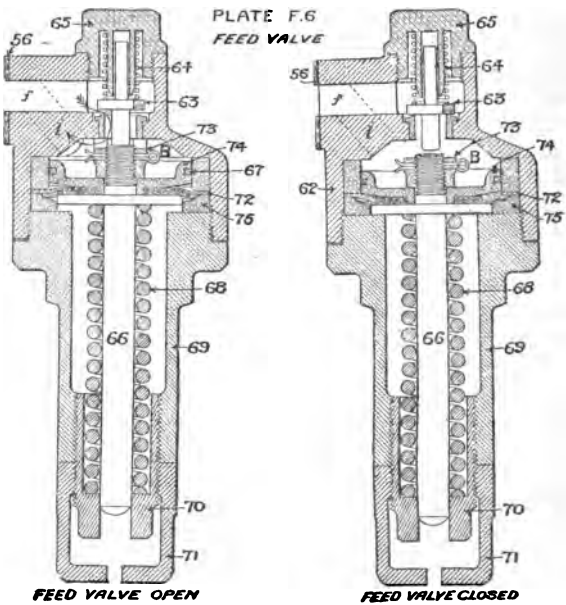

action of the F-6 feed valve the passage of air from the main reservoir to the brake pipe was free up to forty-five or fifty pounds, and was then gradually restricted as the pressure raised, so that between sixty-five and seventy pounds the opening was so small that with a long train or much leakage it took a long time to feed up between those pressures.

To stop the piston in case the brake valve is in full release position, the lower part of the piston comes against the top part of the spring case 69, in the illustration the piston is shown in this position, in service it moves down only far enough to allow valve 63 to close. The small

Digitized by Google

spring 64 closes the valve when the piston moves down.

The two gaskets 72 are intended to stop any brake pipe air leaking by the piston. There is a recess in bushing ring 75 deep enough to hold the smaller gasket when the piston is down. If this gasket is too thick for this recess it will hold up piston and feed valve so that brake pipe pressure will get too high. If spring case 69 is screwed up too far into valve body 62, the edge of the larger gasket will be smashed out thin, the two gaskets will then fill the recess in 75 and hold the piston up and valve 63 open, which will allow brake pipe pressure to feed up too high.

If the stem of valve 63 that runs up into the cap nut 65 gets bent, the valve will not seat squarely, and air will leak past it steadily.

A leak through the gasket 56 from port *f* to port *i* will allow air to pass from the main reservoir to brake pipe without passing valve 63.

Do not confound this leak with a leak through gasket 61 in the brake valve, which allows the air from main reservoir to flow into chamber D in any position except full release. A leak through the feed valve affects the pressures in *running position* only, as that is the only position in which air can pass the rotary to the feed valve.

The feed valve attachment must be kept clean if it is expected to work correctly. If the valve 63 gets gummy so that it is not air tight on its seat, the main reservoir will tend to equalize with the brake pipe at more than the standard amount.

The Slide Valve Feed Valve, G-6, which is a later type than the F-6, is shown in two positions, has a slide valve 55, to open and close the air supply port *b*, and allow air to pass from the main reservoir to the brake pipe when the rotary is in running position. This supply valve is operated by a piston, 54, which is moved in one direction by the main reservoir air pressure, in the other by a spring, 58.

To aid the reader we have prepared two sketches of

Digitized by Google

this feed valve in which the parts and passages are shown in such relations to each other that the flow of air through the complete valve may be more easily understood.

With the G-6 feed valve the pressure of the main reservoir air against the piston, 54, must be sufficient to push it over against the strength of the spring 58, before the slide valve will be moved to uncover port *b*. With this valve at work feeding up the brake pipe the main reservoir will show slight excess pressure at all times. This you do not see with the F-6 valve, as its feed valve is not held open by the main reservoir pressure.

Main reservoir air enters at *f*, passes into the slide valve chamber F on top of, around the ends and sides of

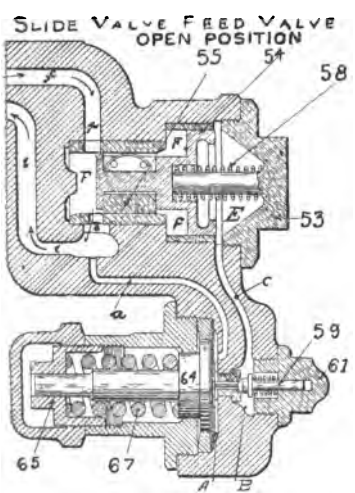

Fig 3.

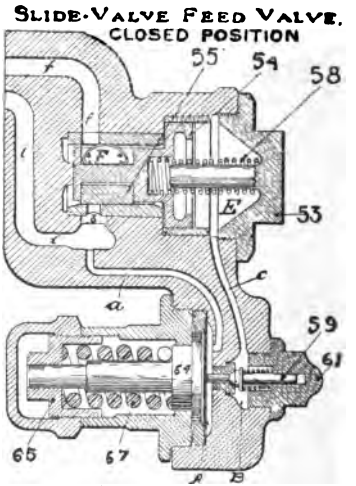

Fig. 4.

valve 55 and against piston 54. Chamber E, on the other side of the piston, is connected through passage *c* with the chamber around regulating valve 59, and if this valve is open, air from E will pass through *a* into the brake pipe

Digitized by Google

through *i*, so that air in E can equalize with that in the brake pipe.

A diaphram, 57, which consists of two thin brass sheets keeps the brake pipe air from escaping to the atmosphere through the spring case, this diaphram rests on a piston, 64, which is held up by the regulating spring 67. The stem of the regulating valve 59, rests against this diaphram, when 57 moves over, the regulating valve moves with it. With reservoir pressure in F and brake pipe pressure in E, the piston and slide valve moves from the position shown in Fig. 4 to that shown in Fig. 3, so that the port is open at *b*, allowing air to pass from *f* to *i*. Piston 54 is not a tight fit in its bushing, while the main reservoir pressure is holding it over against the spring 58, air is leaking by the piston steadily from F into E and thence through passage *c*, past the regulating valve and passage *a* into the brake pipe; in addition to what goes in at port *b* so that air is feeding into the brake pipe through two passages *b* and *c*.

When brake pipe pressure reaches the standard amount it has moved the diaphram and its piston over against the resistance of spring 67 and allowed valve 59 to seat as shown in Fig 4. This stops the passage of air from E to brake pipe, piston 54 not being an air tight fit, air from F soon equalizes with E. Spring 58, which was compressed when the piston moved towards E, now reacts, pushes 54 and 55 back into position shown in Fig. 4, this stops the flow of air through *b* into the brake pipe, as the regulating valve has stopped the flow of air from E, no more air passes in at either place, and brake pipe pressure will not rise any higher. When brake pipe pressure falls below the standard amount, the regulating spring will move the piston 64 and diaphram enough to unseat valve 59, air in E can then equalize with brake pipe, reservoir pressure in F at once moves the piston and slide valve as shown in Fig. 3 and air feeds into brake pipe again.

If the regulating valve leaks, if either of the cap nuts

Digitized by Google

53 or 61 leak, or if the spring 58 is too weak, or gone, the piston will hold slide valve open so that brake pipe pressure may get too high. If the opening by the seat of the regulating valve is stopped up, or the regulating spring is too weak, the slide valve will be closed. To clean valve 59 leave rotary in service position and take off cap nut 61. To clean piston 54 remove cap nut 53. Piston 54 has no packing rings, it should be clean and free from gum.

If the feed valve is dirty and gummed up it will act so slowly that the head brakes are apt to creep on when you go to running position after a release.

The B-6 feed valve is much the same as the G-6, the first ones B-4 had a small port drilled through the piston 8 and a packing ring 9, that regulates the supply of main reservoir air passing into the chamber G behind the piston. The later valves B-6 do not have this air port and packing ring. In all respects the operation of the piston with its supply valve, and the regulating valve is the same as the G-6 feed valve. But there is a quick

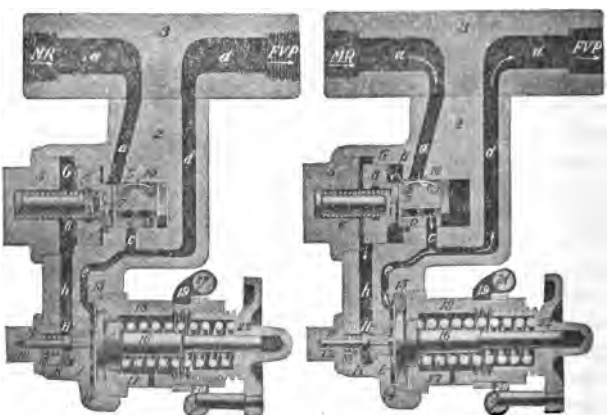

DIAGRAM OF B-6 FEED VALVE, CLOSED DIAGRAM OF B-6 FEED VALVE, OPEN

thread screw on the regulating nut 23 that allows a change to be made in the tension of the regulating spring 18 so that the pressure of the brake pipe air can be changed

from 70 to 110 pounds, or vice versa, by a partial revolution of the small hand wheel that is part of the regulating nut 23. Secured to the spring case 19 are two split rings, 20 and 21, a small screw 22 binds the ends of the split ring when once adjusted so it cannot slip around on the spring case 19. The feed valve is first adjusted to close at the lower pressure, say 70 pounds, and the split ring 21 brought against the pin fixed in the hand wheel 23. The wheel and adjusting nut 23 are now turned to increase the tension on the spring 18 till the valve will close at the higher pressure, say 110 pounds, and the split ring 22 is moved against the other side of the pin in 23. By turning 23 so the pin rests against one or the other of the stops on the rings 21 or 22, the tension of the spring is adjusted for the proper pressures. This type of feed valve is usually attached to a pipe bracket, as shown in the cut, but it can be attached to the 1892 model valve the same as the G-6 feed valve. When so used it will do away with the pipe bracket, the reversing cock and one of the two G-6 feed valves used with the high speed brake.

16. Q. What pressure does the black hand of the double gage show, and why?

A. It shows the pressure in chamber D above the equalizing piston in the brake valve, and in the brake valve reservoir, it is connected to the pipe from chamber D to the small reservoir and not to the brake pipe. It is connected in this manner because when applying the brake the engineer must know exactly how much he reduces the brake valve pressure over the equalizing piston, therefore the black hand must show the exact pressure there while making a service reduction. If the brake is set with a direct or emergency application the gage does not at once show the exact brake pipe reduction.

17. Q. In what position of brake valve does it also show the exact brake pipe pressure?

A. Full release, running position, or anywhere between full release and lap. In these positions the equalizing port *g* which is the communication between the brake pipe

Digitized by Google

and the chamber D, is open. In any other position this port is shut to the brake pipe pressure so it is not connected to the black hand direct.

18. Q. Then the black hand does not show the exact brake pipe pressure when on lap or past lap towards the emergency position?

A. No, not immediately, and you can easily prove this by placing the valve on lap and opening the angle cock at rear end of tender; the brake pipe pressure will drop to nothing at once, which the black hand will not do. Usually the equalizing piston packing ring leaks a little, and the black hand will drop back slowly as the air leaks out into the empty brake pipe; if there are no leaks in the brake valve, or connections to gage or brake valve reservoir, it will not drop any. Unless the packing ring leaks considerable it does little harm. A very small leak is an advantage as it will show on the black hand the brake pipe pressure as soon as the pressures can equalize past the piston, it can warn the engineer if valve is left on lap and brake pipe pressure falls slowly without setting the brake.

If the air in the brake pipe and chamber D can equalize past piston 47 the black hand will show brake pipe pressure; when auxiliaries have equalized with brake pipe, it will show both pressures.

19. Q. When the brake valve has been left on release position till brake pipe and main reservoir have equalized at seventy pounds, and is then placed on running position, are the brakes apt to creep on at once? Why is this?

A. When the valve is placed on running position, it shuts off the air from brake pipe till the excess pressure is picked up in the main reservoir to force the air past feed valve; before this excess is picked up if the brake pipe leaks, the brake will set. In such a case, run your pump a little faster for a few minutes—not over five—so as to get the excess quicker. If train is under motion and you feel a brake dragging, put the brake valve in full release for a second only, then place it in running posi-

Digitized by Google

tion; this may have to be done a second or third time until air begins to go through feed valve, when it will hold brakes off. A short rule for this is: Keep your excess all the time by not using the full release position, except at the time of releasing the brakes, then running position will hold them off.

20. Q. Please state the different positions of the brake valve, the course the air takes passing through it, and what ports are covered in each position.

NOTE—To aid the student we have prepared some sketches of the D-8 brake valve that form its construction and is more easily explained than the later valves, in which the rotary 13 is shown as if it were a long valve sliding in a straight line back and forth over a valve seat instead of turning on a center as the actual rotary valve really does. In these sketches the rotary is shown as if cut between the preliminary exhaust cavity *p* and the emergency exhaust cavity and straightened out as a hoop is straightened out when cut across. The ports are shown in somewhat changed positions so they will be in proper communication with the ports and cavities in the sliding valve 13. Ports *a* and *g* are shown in the sketch as if they communicated with each other, in the actual rotary valve *a* is nearer the center than *g*, so in service they do not register with each other. In actual service port *j* registers with *f* in running position as shown, and with port *g* in emergency position; but for the purposes of explanation the sketch gives a very good idea of the course of the air in the various positions of the D-8 valve.

A. When on full release position, main reservoir air which comes in the brake valve on top of the rotary can pass through opening *a* in the rotary into a cavity in the rotary valve seat *b* and from there around the bridge in rotary and into the brake pipe direct; in this position the main reservoir and brake pipe pressures can equalize. The air from main reservoir also passes through the feed port *j* in rotary valve into the supply port *e* for the preliminary exhaust and down into chamber D. Air can also

Digitized by Google

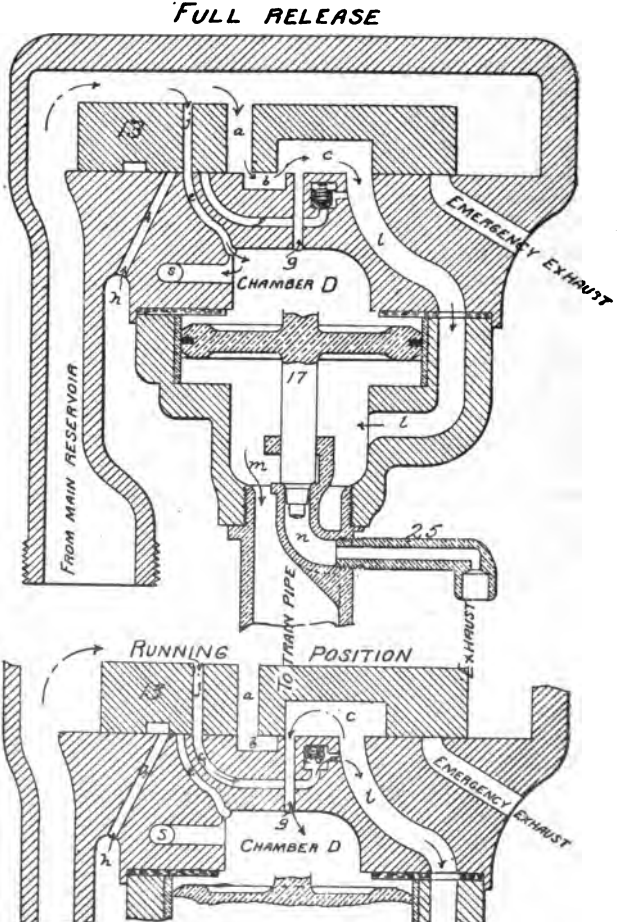

Digitized by Google

pass into chamber D from the brake pipe cavity *c* in rotary valve through equalizing port *g*. In this position the warning port is open so main reservoir air blows through rotary into main exhaust port. The preliminary exhaust and emergency exhaust ports are closed as well as the feed port *f* leading to the excess valve or feed valve.

When on the next position, called running position because it is the proper position when train is running with brakes released, the direct supply port is covered so that main reservoir air can not get into brake pipe direct, the supply port *e* is also covered so no main reservoir air can pass through into chmber D. The feed port *f* is opened and main reservoir air must then pass through this port and go past the excess valve or feed to get into the brake pipe. Brake pipe air can pass through the cavity *c* under rotary and go through port *g* into chamber D and equalize the pressure on both sides of the equalizing piston. The small warning port is covered. On lap posi-

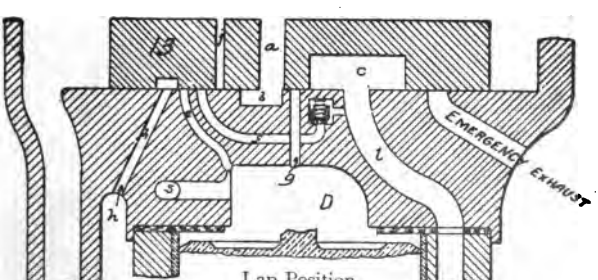

Lap Position

tion all ports are closed so no air can pass under or through the rotary. On service application position the preliminary exhaust port *h* is opened so air flows out of chamber D; this is done by a movement of the rotary, the equalizing piston opens the brake pipe exhaust port automatically. All other ports are closed.

On emergency position the direct application port is opened, allowing the air in the brake pipe to pass directly

Digitized by Google

SERVICE APPLICATION POSITION.

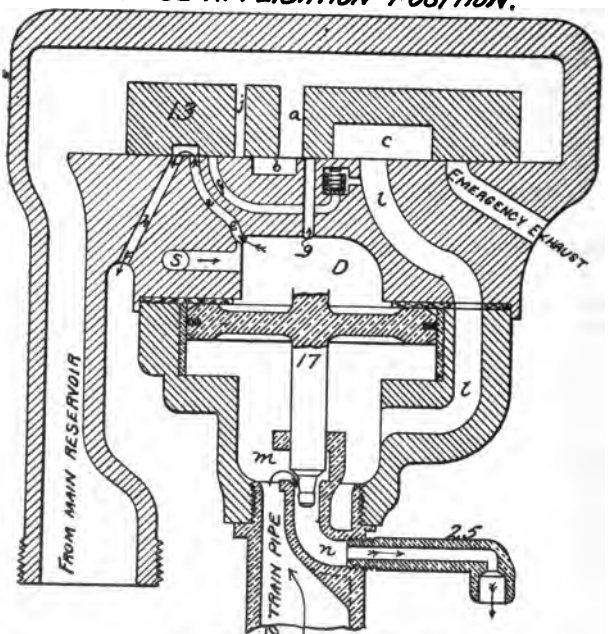

EMERGENCY POSITION

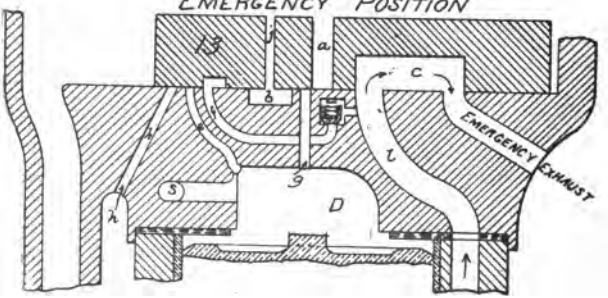

Digitized by Google

to the atmosphere through the cavity under the rotary. As this is the largest port in the brake valve, if it is opened wide the air in the brake pipe will escape suddenly.

The preliminary exhaust port is left open, all other ports are closed. The port from brake valve to brake valve reservoir is open at all times.

21. Q. Do leaks in the brake valve interfere with its work?

A. Yes; if there is a leak under the rotary valve from the main reservoir to brake pipe, the brake pipe pressure will raise so that the brake will release when valve is on lap. A leak from brake pipe under rotary valve, or through brake pipe discharge valve to atmosphere, or a leak between equalizing reservoir and brake valve when valve is on lap, will set the brake tighter than you want it. If it leaks through gasket from main reservoir to cavity over equalizing piston 47 in F-6 valve, or past gasket 18 in the H-type valve, brake cannot be set in service application, as air will flow into chamber D from main reservoir as fast as it flows out of preliminary exhaust. Using the brake valve on emergency habitually will tend to cut the rotary and seat quicker, as it brings sand and scales of iron rust up from the brake pipe on the seat, which the service application will not do. If the brake valve is fastened close to the boiler head so it gets very hot, the leather gaskets get burned and crack so they leak badly. A bad leak past the equalizing piston will cause engine brakes to release when set with a light direct application. This is because air leaks from equalizing reservoir past piston and raises brake pipe pressure in the short brake pipe on engine and tender. This leak will also prevent the equalizing piston raising when making a service reduction if the air can come past the piston into chamber D as fast as it is discharged through preliminary exhaust port. It also makes the brake pipe reduction less than the gage at first shows, on a long train.

22. Q. What is the effect if equalizing reservoir pipe is broken so a blind joint has to be made?

Digitized by Google

A. The brake cannot be set with a gradual application in service position; there is so little air above the equalizing piston, it escapes out of preliminary exhaust so quickly that the pressure above piston is reduced more than twenty pounds, equalizing piston stays up and the brake works with full application; some times emergency with a very short train.

23. Q. What should you do in such a case?

A. If joints cannot be made so as to use equalizing reservoir again, a blind joint should be made at its connection with brake valve; the elbow in brake pipe exhaust should be plugged and valve used with direct application port, taking care to make a gradual reduction so brake will not go on with emergency, and closing valve slowly so the brakes on head end will not be kicked off. The elbow has a thread cut in it for plugging; if it is not threaded take it out and plug the hole with the plug in the equalizing reservoir. A ⅜ plug is used with the type H valve.

24. Q. With the equalizing discharge valve, why does the air blow out of the brake pipe exhaust when brake is released, if working brake on engine and tender only?

A. Because the brake pipe is charged up through a large hole in rotary valve; the cavity over equalizing piston and brake valve reservoir is charged from the main reservoir through the small supply port *e* for preliminary exhaust, and by equalizing port *g*. If the brake pipe is short, it will charge up to a full pressure quicker than the space above piston; brake pipe pressure will then raise piston and discharge valve, allowing air to blow out of brake pipe exhaust elbow for a second or two. There is no flash of air from the type H brake valve when coupled to any cars. A short flash of air comes from the H type *when additional cars are cut in,* if the H-5 valve is on lap, the H-6 on running position, as air will blow out of the application chamber caused by the brake pipe reduction.

Digitized by Google

25. Q. Can this action of the valve be of advantage to you?

A. Yes; if you hear this escape of air from brake pipe exhaust when releasing brake on a train, it is a sign of a short brake pipe; and is a notice to the engineer that an angle cock at the head end of train is closed, or something has got into the brake pipe and stopped it up. You should see at once if an angle cock is not shut by some mistake or malicious intent. Check chains swinging against the handle will close it.

26. Q. Does the amount of air which blows out of brake pipe exhaust when setting the brake with a service application give you any idea of the number of cars in your train working air?

A. Yes, with engine and tender only, the brake pipe exhaust does not blow much, if any, longer than preliminary exhaust. With a long train it takes some seconds for the brake pipe pressure to be reduced and equalize its whole length. You can, after some practice, tell whether you have a long or short train working air by listening to the amount of air escaping from barke pipe exhaust. This test shows the length of brake pipe cut in and filled with air, not the number of brakes that set. It takes considerable practice to tell how many cars are coupled on. By this test it gives the number of car lengths of brake pipe in use; if the triple is cut out on any car it gives you no notice. When some of the cars are cut out by closing angle cocks, a less amount of air will come out than with all of them. It is important to know this, as some of the angle cocks may be closed, thus cutting off all the cars behind the closed one. In making a test for the length of brake pipe connected to the brake valve, reduce your brake valve pressure exactly five pounds by the gage and then note the amount of air coming out of the brake pipe exhaust. Always use the same amount of reduction as there is no sure way to compare the length of brake pipe exhaust for different trains unless the same brake valve reduction is used as a measure each time. A partly opened angle

Digitized by Google

cock can be detected by this test, for the air will flow with a strong, steady sound from the brake pipe ahead of the partly opened cock, while the air from the pipe behind it will string out longer and weaker than it should. Look out for this, as the brakes can all be set, but as the air equalizes very slowly into the rear cars some of the triples in rear cars are liable to stick. With a full train of *quick-service* triples considerable brake pipe air goes through these triples to the brake cylinder; so a less amount of air will come out of the brake valve from the brake pipe than with the older form of triples.

27. Q. What is the stop cock under brake valve for? Will it assist you in locating leaks? How?

A. To cut out the brake pipe from brake valve when double heading, so only one engineer can control all the brakes. For this purpose it is absolutely necesary. Yes, it will assist in locating leaks. When shut, after charging brake pipe and auxiliaries, if there is a leak in brake pipe, brake will set at once; if the rotary leaks either into or our of the brake pipe, it will show it very soon, as there is so short a brake pipe to leak into or out of. A little observation will teach you many ways of using this cut-out cock in testing for leaks. With the H-5 valve and the distributing valve this stop cock controls the exhaust from the distributing valve.

28. Q. If you had an 1892 or an H-type valve and the brake would not go on in service application, nor the black hand fall, nor the brake pipe exhaust open, while air came readily from preliminary exhaust, what would be the matter?

A. I would look for a leak at the joint on lower gasket where a leak would allow air to get from main reservoir direct to cavity over equalizing piston No. 47. This would give main reservoir pressure to chamber D and show it on the black hand. A brake valve with this leak would show very little or no excess pressure. No air could come out of brake pipe exhaust, as the pressure could not be reduced over the piston so valve could be raised. To set the brake

Digitized by Google

use direct application port, opening and closing it slowly.

29. Q. If you had a continual blow at the brake pipe exhaust port of the brake pipe valve and could hold no air, where would the difficulty be apt to be found?

A. Stuck or leaky equalizing piston, dirt on its valve seat, brake valve reservoir bleed cock open, or bad leak in pipe to brake valve reservoir or gage. Would put valve on lap, then on emergency for a moment and see if that would stop it, or close the stop cock under the valve and flash the valve to clean off the seat.

30. Q. How should the brake valve handle be placed when running or standing with brake released, unless auxiliaries are being charged? Why?

A. Always in running position. Because this is the only position in which you can carry excess pressure, which is needed to release brakes promptly. With 1892 valve on full release the brake pipe pressure will run up as high as pump governor will allow; this high pressure is apt to slide the wheels. A small blow hole is put in the rotary valve to warn engineer that valve has been left in full release. All valves should have this warning port; if it gets stopped up, it is a sign that there is dirt on top of rotary valve, which should be taken out and cleaned at once. When on running position the opening through brake valve from main reservoir to brake pipe is a smaller one than on full release. If the train breaks in two or conductor's valve is opened to stop the train in case of accident, the brakes will operate instantly as the brake pipe pressure can be reduced from the train faster than the running position feed port can supply it. If the valve is on full release the brakes will not set tight till the main reservoir pressure is also reduced. If necesary to hold engine brakes with the H-type valve after a release of train brakes, use holding position.

31. Q. What are the essential differences between the 1892 model and the 1906 or H-5 brake valve?

A. The H-5 brake valve has all the pipe connections made at the bottom section or pipe bracket, so the valve

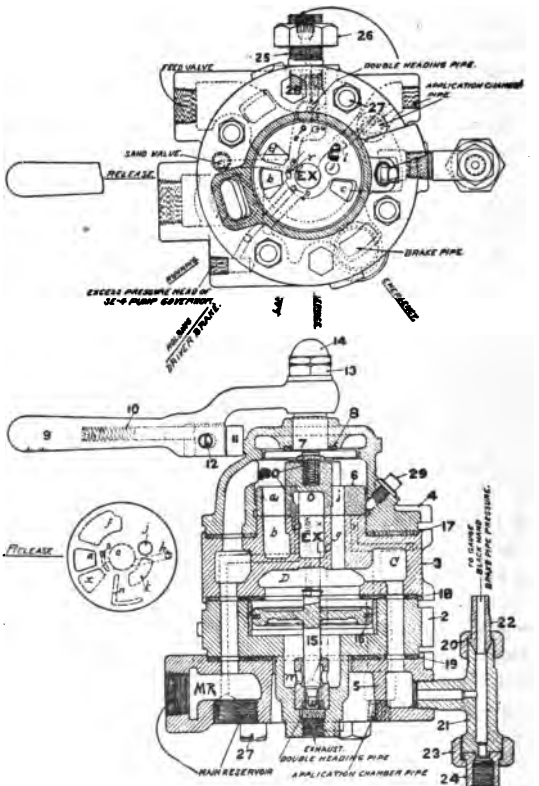

H.5 AUTOMATIC BRAKE VALVE

Digitized by Google

can be removed from the engine without disturbing any pipe joints. The feed valve is located on a pipe between the main reservoir and brake valve. The brake valve receives main reservoir air direct through one pipe. This air comes on top of the rotary. Air at a reduced pressure comes through the feed valve and another pipe; coming under the rotary at port *d*. The preliminary *e* and emergency exhaust *x* is through the center of the rotary *o* into the cavity EX in section 3 of the valve and thence to the atmosphere. The brake pipe exhaust is at the bottom and in the center of the valve. This valve is intended to be used in connection with an independent brake valve and the distributing valve for the locomotive brake and has two pipe connections for this purpose. In the rotary valve seat there is a port *l* that connects with the pipe leading from the application chamber of the distributing valve through the independent brake valve. When the rotary is in running position port *h* in the rotary registers with *l*, if the independent valve is also in running position, the locomotive brake will be released.

There is another position of the H-5 valve, called holding position, located between running and lap, in which port *h* does not register with port *l*, but air coming through the feed valve can pass out of *d* through *f* in the face of the rotary into *b*, thence through a cored out passage to *c* and the brake pipe leading to the train. With the H-5 valve in holding position the train brake will be released and the locomotive brake held set. This port *l* is also lapped in full release, so that the train brake can be released and at the same time the engine brake be held set if required; this will hold the slack back in the head end of the train and make it safe to release the train brake at slow speeds, and not break in two. Another port *u* in the rotary seat connects with the double heading pipe, port *h* registers with *u* in lap position. This pipe leads from the exhaust port of the distributing valve and is only used on the following engine of a double header. When the

Digitized by Google

double header cut out cock under the brake valve is closed this pipe connection through the cock is open.

In the emergency position of the rotary, port *l* in the seat registers with port *g* through the groove *n* in the face of the rotary so that in emergency position air from the brake valve reservoir can flow into application chamber of distributing valve and apply the engine brake with greater force. Port *p* connects with the excess pressure head of the pump governor, when the rotary is in full release, running or holding positions; main reservoir air can pass through port *s* in the rotary and the small groove in its face and enter port *p*, thus controlling the excess presure head of the governor in these positions. In full release main reservoir air from port *s* flows through the warning port *r* into EX and gives the warning that the valve is in full release position. In service position port *h* in the rotary registers with *e* in the seat, air from chamber D flows into *o* and EX, all other ports in the seat are closed. The action of the equalizing piston 15 has already been described. Cavity *k* in the face of the rotary connects ports g and c in runing and holding positions, so that brake pipe and chamber D charge up alike in these positions and there is no flash of air from the brake pipe exhaust when releasing brakes with a short train.

Plug 29 can be taken out and some good oil poured in the cavity around the lower edge of the rotary to lubricate it. Spring 30 holds the rotary key 7 up against gasket 8 when there is no air pressure to do this. In full release position main reservoir air passes through ports *a* in the rotary and directly into port *b* and the brake pipe, and port quickly. In running and holding positions cavity *f* in the face of the rotary connects ports *d* and *b* so the air that has been reduced in pressure at the feed valve can flow into the brake pipe and charge it up to the pressure that the feed valve closes it, and no higher. To take the H-5 valve off its pipe bracket take out the through bolts. To take the valve apart take out the tap bolts that hold the valve sections together.

Digitized by Google

32. Q. Describe the independent brake valve.

A. This valve is used in connection with the distributing valve and allows air to flow into or out of the application chamber, and thus operate the supply valve piston, that in turn operates the valves which admit main reservoir air to the brake cylinder to set the engine brake or exhausts the cylinder air to release it. It does not admit main reservoir air direct to the brake cylinder as the Straight Air brake valve does. It has four positions, release, running, lap and service, that come the same as on the automatic brake valve. A stiff spring 9, in the top of the valve body 3 returns the handle from release to running position as soon as the engineer removes his hand.

In running position port *d* from the distributing valve is connected through port *f* in the rotary 5 with port *c* leading to the automatic valve, so that air can flow from the application chamber through the independent valve to the automatic brake valve, and this valve should always be in running position when the automatic valve is to operate the engine brake. In release position cavity *g* in the face of the rotary 5 connects port *d* with the exhaust port *h* in the center of the seat, so that the application chamber air can pass to the atmosphere without regard to the position of the automatic brake valve and release the engine brake independently of the train brake. In service position cavity *e* in the rotary connects the supply port *b* with *d* so that main reservoir air reduced to 45 pounds can flow direct to the application chamber and operate the distributing valve supply piston; this position applies the engine brake independently. Lap position blanks all ports and is to be used only when making a graduated application or release of the engine brake or when trying to prevent the release of the engine brake by the automatic valve, or the passage of air from the brake valve reservoir through the automatic valve in the emergency position to the application chamber. Leaving the independent valve in lap position when operating the automatic valve

Digitized by Google

is liable to cause trouble. This valve does not affect the operation of the train brake in any way and is to be used

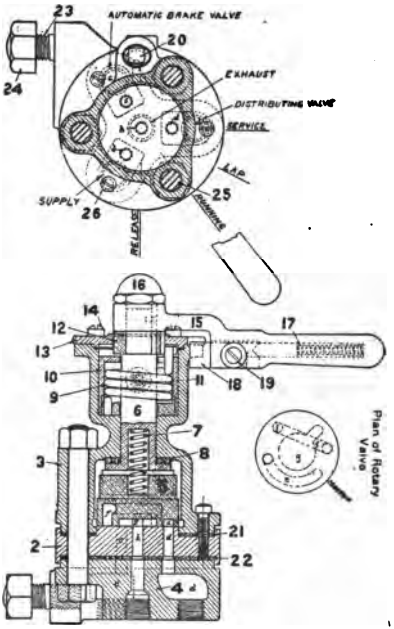

INTERIOR VIEWS OF THE INDEPENDENT BRAKE VALVE

when operating the engine brake while switching cars, or independently at any time. Its supply of air comes from the main reservoir through a reducing valve set at 45 pounds. The arrangement of these valves is shown in the page illustration and they are part of the ET locomotive brake equipment. The location of each valve in this type of brake is plainly shown, so no description is given.

33. Q. Describe the distributing valve in its construction and operation.

A. The distributing valve is shown separately and attached to its double-chambered reservoir. The pressure

Digitized by Google

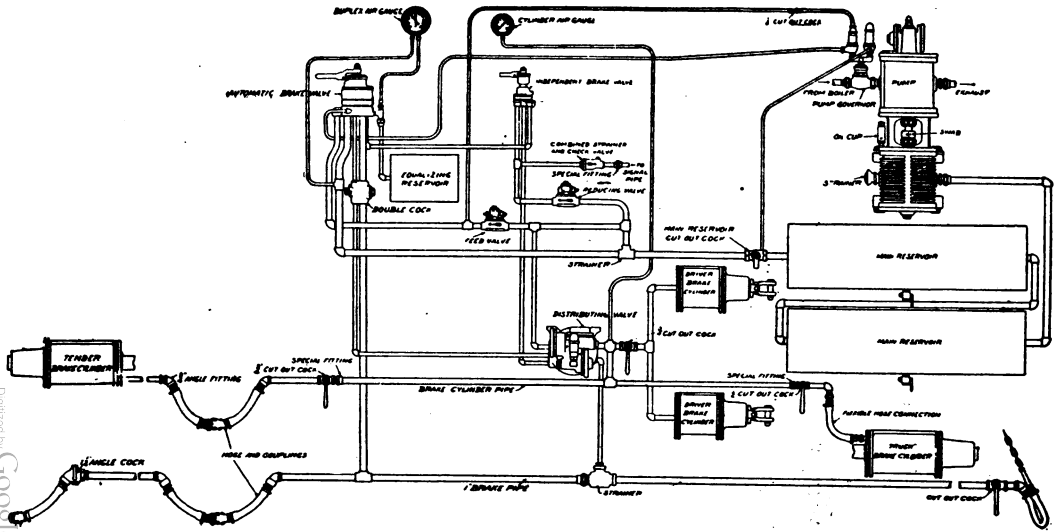

PIPING DIAGRAM OF THE ET EQUIPMENT

Digitized by Google

chamber represents an auxiliary reservoir and the application chamber the brake cylinder as regards the equalization when the air passes to the application chamber; this comparison is for explanatory purposes only. There are five pipe connections, only two of which show on the ex-

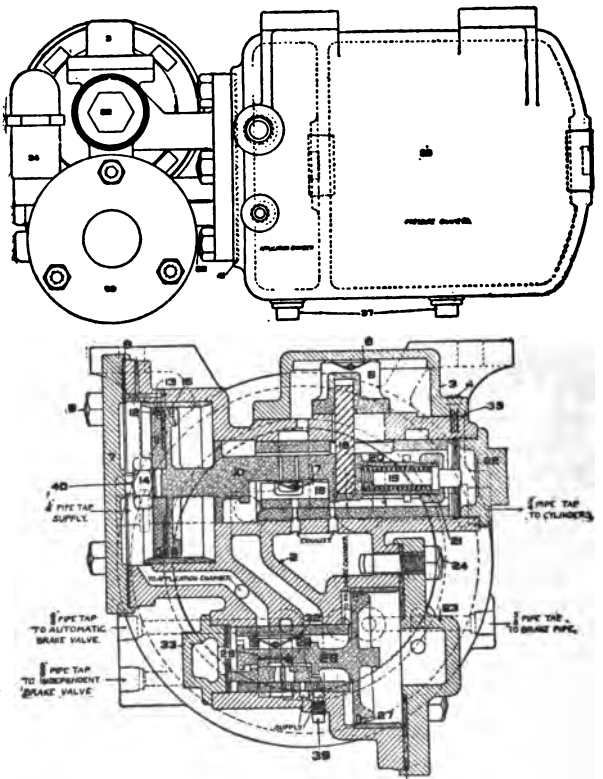

posed side of the reservoir. On the next page is shown a diagrammatic view of the valve and reservoir, in which the valve is shown much larger in proportion to the size

Digitized by Google

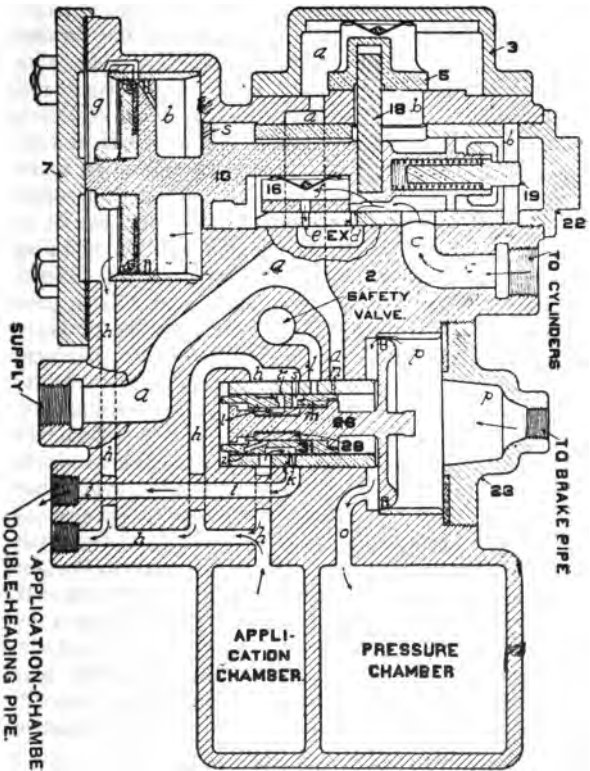

RELEASE, AUTOMATIC OR INDEPENDENT

Digitized by Google

of the reservoir than it really is. We will use capital letters as abbreviations for the names of the five pipe connections made to the reservoir and from there to the various parts of the valve. In the diagrammatic view slide valve 31 and graduating valve 28 are shown both above and below the piston stem 26, so the ports that are beside each other can be seen. Air from main reservoir enters at supply, passes through port *a* up and around application valve 5; also down to seat of slide valve 31 and through port *n* to the pressure chamber when valve 31 is in emergency position. Air from the brake pipe enters at BP and is on the outside of equalizing piston 26. When this piston is in release, as shown, brake pipe air can pass around the piston through the feed port into the pressure chamber. When thte brake pipe pressure is reduced piston 26 moves back towards the reducing train pipe pressure, bringing first graduating valve 28 and then moving slide valve 31 as soon as the lost motion between the shoulders on piston stem and valve 31 is taken up. This admits air from the pressure chamber to the application chamber through ports *o* and *h*, and in this respect is exactly like a triple valve when feeding air from the auxiliary to the brake cylinder. With a partial application of the automatic brake equalizing piston 26 and its valves reduces the pressure in the pressure chamber by allowing air to pass into the application chamber till the pressure chamber is a trifle lower than the brake pipe when piston 26 moves back and laps graduating valve 28. This movement has been fully explained in connection with the triple valve.

At the same time that air flows into the application chamber, it also flows up through port *h* into the space *g* behind the application piston 10. This moves application valve 5 and as soon as the lost motion is taken up, exhaust valve 16 covers the exhaust ports *e* and *d*. Valve 5 next opens the supply port from *a* into *b* and *c*, so main reservoir air can flow to the brake cylinder at BC and apply brake. We will suppose a 7-pound reduction

Digitized by Google

is made in the brake pipe. As soon as it is felt on the piston 26 at *p* it will move towards BP, open valves 28 and 31 closing exhaust port *k* Air will flow into the application chamber and cavity *g* till the pressure chamber is also reduced 7 pounds, when piston 26 will move back and lap valve 28 over the port in valve 31. Air pressure in *g* will then move piston 10 and its valves 5 and 16, closing the exhaust ports *c* and *d* and opening supply port from *a* to *c*. To open port from *a* the graduating stem 19 must be moved back against the tension of its spring 20, when the stem 19 meets cap nut 22. As soon as the presure in *b* and the engine brake cylinders is equal to that in that in *g* on the other side of piston 10, spring 20 and the stem 19 will move piston 10 and valve 5 back to lap, but does not move valve 16 to open the exhaust. This applies the brake and holds it applied as long pressure remains in *g* and *h*. If leaks in the brake cylinder packing or piping reduce the pressure in *b*, piston 10 will move towards this lecreasing pressure and open the supply port till the pressure in the cylinder again equals that in *g*, when piston 10 will lap valve 5. When the air in the application chamber is either wholly or partly exhausted to the atmosphere, piston 10 will be moved back towards *g* by the brake cylinder pressure and either wholly or partly exhaust the air from the cylinder.

In the independent application and release of the brake through the distributing valve the lower or equalizing piston 26 and its valves do not move. The air is fed into and out of the application chamber and chamber *g* by the independent brake valve at the pipe connection AC. This air comes from the main reservoir and is reduced to 45 pounds presure befoure passing through the independent brake valve. When the independent valve is in service position air flows in at AC till the pressure in the application chamber and *g* is enough to apply the brake the desired amount. A partial or full application can be made depending on how much air is admitted through the brake valve, and a partial or full release by lapping the brake

Digitized by Google

valve before all the air has escaped. To prevent the air passing out the exhaust port *k* of valve 31 when in release position port *i* is piped at DH to the double heading cock in the brake pipe under the automatic brake valve. When this cock is open for the brake pipe, as it should be when the automatic brake is being operated from that engine, the pipe leading from the exhaust port *k* is closed so no air can escape through valve 31 when in release position. But if this engine is not operating the train brake in a double header the exhaust port *k* is open through a pipe from DH through the cut-out cock and a port in the H-5 automatic brake valve when the rotary is in lap position.

There is a cut-out cock in the brake pipe connection before reaching BP to cut out the distributing valve from operating automatically when necessary. Closing this cut-out cock does not prevent the brake being operated by the independent brake valve.

When the automatic brake valve is in the emergency position air from the brake valve reservoir can flow through a port in the H-5 valve, then through the independent valve—if it is in running position—into the application chamber and *g*, so that the engine brake can be applied in that position of the automatic valve, even if cut out from the brake pipe. This is a feature of the H-5 only.

When piston 26 is moved its full travel to the emergency application position so it rests against gasket 25 in cap 23, ports *n* in the bushing and *m* in valve 31 will be open to each other so main reservoir air can flow slowly through the small port *n* into the pressure chamber and increase the pressure there. At the same time port *l* is open to the safety valve 34 and it will reduce the pressure there to about 60 pounds. This feature is intended to operate the brake the same as the high speed reducing valve. In the No. 5 distributing valve (the one here described), port *l* is only open to the pressure chamber

Digitized by Google

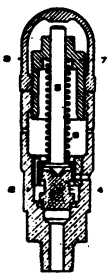

(6.—SAFETY VALVE.

and port *h* in application position; being closed in release and lap positions of valve 28 and 31. For this reason, when using the independent brake valve only with the equalizing piston 26 in release or lap the safety valve 34 will not reduce the pressure in the application chamber should the reducing valve for the independant valve be out of order and allowing too high a pressure. This safety valve is set at 53 pounds, and will blow down to that with an automatic service application.

34. Q. Are there any differences between the No. 5 ET equipment and the later design, No. 6? Describe them.

A. The No. 6 ET equipment was designed later than the No. 5 just described, there are several differences between the No. 6 and any previous type that enable No. 6 to get the same results easier and have many added advantages.

The release pipe between the automatic brake valve and the independent valve goes direct and not through the double heading cock, the double heading cock of the H-6 is an ordinary stock-cock the same as used with the F-6 valve. In double-heading the normal position of the H-6 valve is running instead of lap as with the H-5. The release pipe from the distributing valve comes from the application cylinder with No. 5 and from the exhaust of equalizing slide valve 31 with No. 6, so that valve 31 must be in release position to release the distributing valve through the H-6 valve. With No. 5, air could come out of the application cylinder and chamber through the two brake valves in running position regardless of the position of slide valve 31. The application cylinder pipe of No. 6 goes direct to the independent valve as before, a Tee connection is put in leading to the H-6 maintaining port. In No. 5 this port was in the distributing valve.

In an emergency application with the No. 6 slide valve 31 moves quickly and laps the port into the application

Digitized by Google

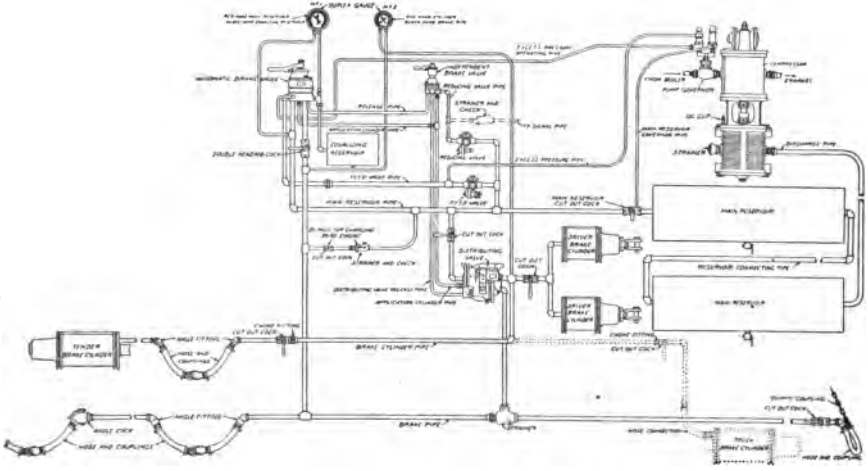

INSTRUCTION DIAGRAM OF THE NO. 6 ET EQUIPMENT

Digitized by Google

chamber so the pressure chamber equalizes with the application *cylinder* only, at very nearly the amount of pressure in the chamber at first, about 65 out of 70 pounds. In a service application the port to the application chamber is held open so the pressure chamber equalizes with the combined volume of the application chamber and cylinder at 50 out of 70 pounds.

The positions of the two smaller pipes at the bottom of the distributing valve are reversed in No. 6 from that in No. 5. The application cylinder pipe is the lower one in No. 5 it is the upper one in No. 6; the lower one in No. 6 connects with the exhaust of valve 31. In No. 5 the double heading pipe that did this work was the upper one.

There is a special cap for the cylinder of piston 26, containing a quick-action valve to vent brake pipe air to the brake cylinders and a rubber seated check to hold it there, this will hurry up the quick-action on the train as a quick-action triple on a tender will do.

There is only one position of slide valve 31 of the No. 6 in which safety valve 43 is not connected to the application cylinder, automatic lap, in all other positions the safety valve will take care of the over pressure.

A careful study of the explanation of the No. 5 will assist in understanding the No. 6, the points that are common to both valves need not be explained again.

35. Q. Describe the H-6 brake valve and its operation.

A. The H-6 valve is similar in outside shape to the H-5; there are differences in the air ports and cavities; using the cut of the rotary and its seat to trace the course of the air in different positions will give a good idea of the work of the valve. It has six positions; full release, running, holding, lap, service application and emergency. Main reservoir air comes in over the rotary valve at MR; feed valve air at FV under the rotary at port *d; b* is the supply port through the seat for the brake pipe and *c* the emergency exhaust from the brake pipe. *o* is

Digitized by Google

the exhaust opening and *x* the emergency exhaust passage in the rotary; *f* connects *d* and *b* in running position.

In full release, port *a* through the rotary registers with port *b*, the brake pipe; so main reservoir air at full pressure goes directly to the brake pipe in this position; *j* in the rotary registers with *g* in the seat, so chamber D charges with main reservoir air direct in this position; Cavity *f* in the face of the rotary connects port *d* with warning port *r* in the seat and allows a small amount of feed valve air to escape to the atmosphere, serving two purposes warning the engineer to move the valve from full release and giving an idea of how sensitive the feed valve is. Port *s* through the rotary has a small groove at the face, this connects with port *p* in the seat allowing main reservoir air to flow to the lower connection of the excess head of the pump governor in full release, running and holding positions.

In running position port *a* through the rotary is closed at its lower end so no main reservoir air can go directly to tne brake pipe, cavity *f* connects *d* and *b* so air from the feed valve can flow to the brake pipe; cavity *k* connects ports *c* and *g*, the brake pipe and chamber D can now equalize. Port *s* still registers with port *p* leading to the governor, *h* in the rotary registers with *l* in the seat that connects with the release pipe and allows air exhausted through valve 31 from the application cylinder and chamber to escape and release the locomotive brake.

When an empty train is being charged, as long as the brake valve is in full release the pump will run at speed, but when the valve is moved to running position the action of the S-F pump governor is sometimes puzzling. As one side of this governor is operated by the excess pressure if the feed valve cannot pass the air to the brake pipe as fast as the pump supplies it, the excess will build up enough between the main reservoir and brake pipe pressures to have the governor stop the pump. In such a case move brake valve to full release and leave

Digitized by Google

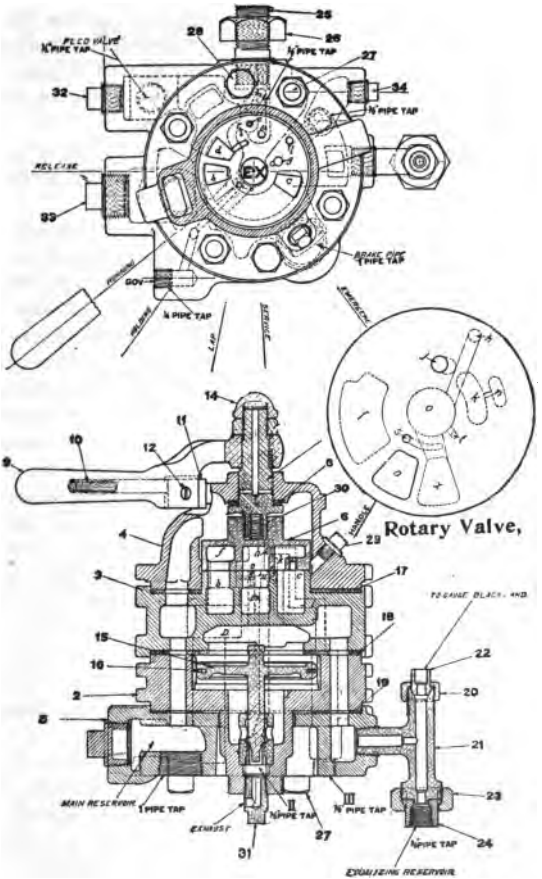

—THE H-6 AUTOMATIC BRAKE VALVE

it there till the brake pipe pressure is close to the standard.

Holding position leaves all the ports that were open

Digitized by Google

in running position still open, except *l*, that is now lapped instead of being open to *h*, the distributing valve cannot release through that port. This position will release and charge up all the automatic parts of the brake on train and engine, but hold the engine brake set.

On lap position all ports in the rotary and its seat are lapped; there is no passage for air in any direction through the ports.

On service position all ports are lapped, except the preliminary exhaust port *e*, this registers with *h* in the rotary, the air in chamber D will now pass out slowly, brake pipe air will raise equalizing piston 15 and its valve and discharge brake pipe air to the atmosphere.

When the H-6 is placed in emergency position, port *x* in the rotary registers with *c* in the seat, making a large opening from brake pipe to atmosphere through *o* in the rotary and EX in the seat. The sudden reduction in brake pipe pressure starts the quick-action in the train brakes and applies all of them in the shortest space of time. Main reservoir air is now passing through port *j* in the rotary, thence through a small port into cavity *k* and small port *n* into port *u* in the seat, and thence through the Tee connection into the application cylinder; this maintains the pressure in this cylinder up to when the safety valve controls it. Port *t* in the rotary registers with equalizing port *g*, air in chamber D will pass out to the atmosphere instead of going to the application chamber as it does with H-5.

36. Q. Describe the S-6 independent brake valve.

A. The independent brake valve S-6 has five positions: Release, Running, Lap, Slow Application and Quick Application. A return spring 6, coiled inside the top of the valve will return the handle 15 from release to running, and from quick application to slow application; the engineer will feel the resistance of this spring when moving the rotary to its full travel, either way. The warning port *l* is provided to warn the engineer in case this spring is broken. Air from the reducing valve at 45 pounds

Digitized by Google

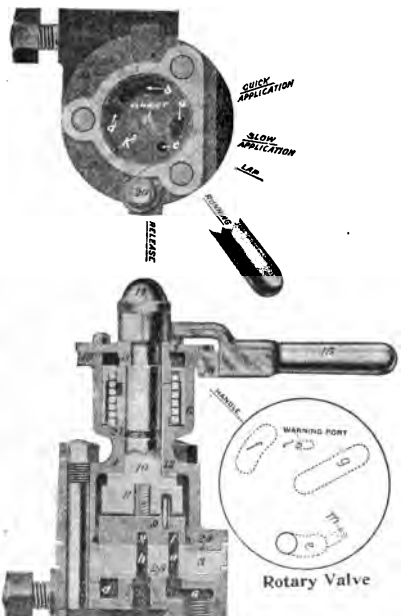

THE S-6 INDEPENDENT BRAKE VALVE

pressure comes in at port *b* and on top of rotary through port *e*. Port *a* leads air through the release pipe IV from the distributing valve exhaust of slide valve 31; port *c* connects with the release pipe to H-6 at port *e*; ports *a* and *c* are connected by groove *f* in the rotary 9 when in running position; with both valves in running position, air exhausted by slide valve 31 can pass through the S-6 and escape at the H-6 valve. Port *d* leads to the application cylinder pipe II, in independent application air passes in through this port and pipe to application cylinder; in independent release air passes out this way. A Tee in this pipe leads to the maintaining port *u* in the

Digitized by Google

H-6 rotary. *h* is the exhaust port, exhaust cavity *g* in rotary 9 always registers with it. *k* is the warning port, *l* is the warning port in the rotary, open in release. A small port *m* connects with groove *e* and registers with *d* in slow application, passing air slowly; in quick application position the larger groove *e* registers with *d* and passes a large amount of air to the application cylinder, setting the brake quickly. The latter part of answer to Q. 32 gives directions for operating this valve.

37. Q. Explain the operation of the No. 6 Distributing Valve.

A. The diagrammatic view of the No. 6 distributing valve gives a good idea of the application portion at the top of the cut; the equalizing portion is in the middle; the double chambered reservoir is at the bottom; for the reference letters and numbers, look at the next diagrammatic cut. Main reservoir air comes into the application portion only, a pipe leads to the brake cylinders. The movement of the application piston and its two valves admits main reservoir air to the brake cylinders or exhausts cylinder air to the atmosphere. Admitting air at a pressure into the application cylinder will move piston 10 and its valves to the right, first closing exhaust ports under valve 16, next opening air port under valve 5, so main reservoir air can flow to the cylinders. If we have put 10 pounds pressure against piston 10 and opened the air port, air will flow in till the brake cylinder pressure builds up to 10 pounds; piston 10 will then be balanced between the two pressures; a graduating stem 19, and its spring 20, in the end of the piston stem will move the piston and valve 5 back to lap. Increase the pressure in application cylinder, piston 10 and valve 5 will move to admit more air, when pressures are balanced; valve 5 will close, thus the pressure can be built up in the brake cylinder by admitting air to the application cylinder. To release the brake, allow part or all of the application cylinder air to escape; piston 10 will be moved to the left by brake cylinder pressure, opening the ports under

Digitized by Google

valve 16 the brake will then be all or partly released, depending on the pressure left in the application cylinder. If leaks in the brake cylinder reduce pressure there, piston

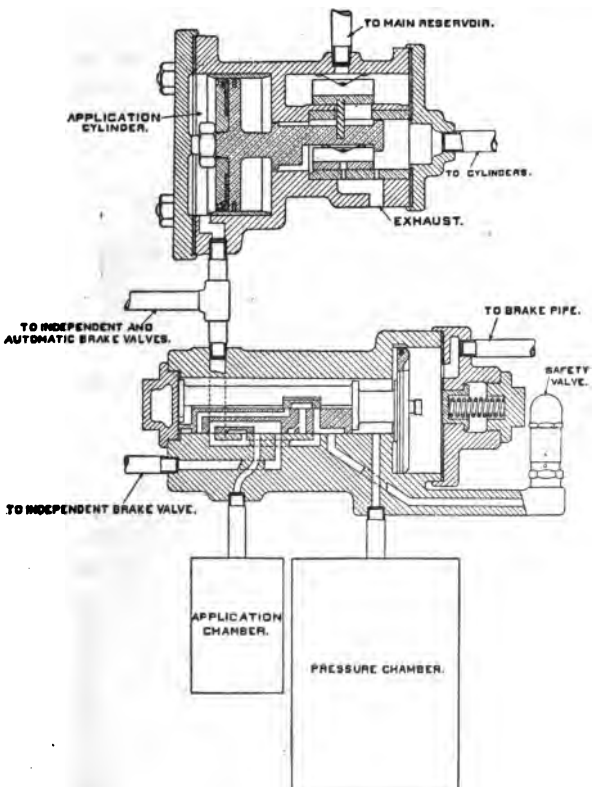

DIAGRAMMATIC VIEW OF THE ESSENTIAL PARTS OF THE DISTRIBUTING VALVE, AND DOUBLE-CHAMBER RESERVOIR.

Digitized by Google

10 will move to the right, open supply valve 5 and build the brake pressure up to equal that in the application cylinder; leaks out of the application cylinder or its piping will tend to release the brake. There are two ways of letting pressure into and out of the application cylinder; one by way of the independent valve and H-6 valve, the other is by the operation of the equalizing portion of the distributing; this is shown clearly in the diagrammatic view of automatic service. The brake pipe

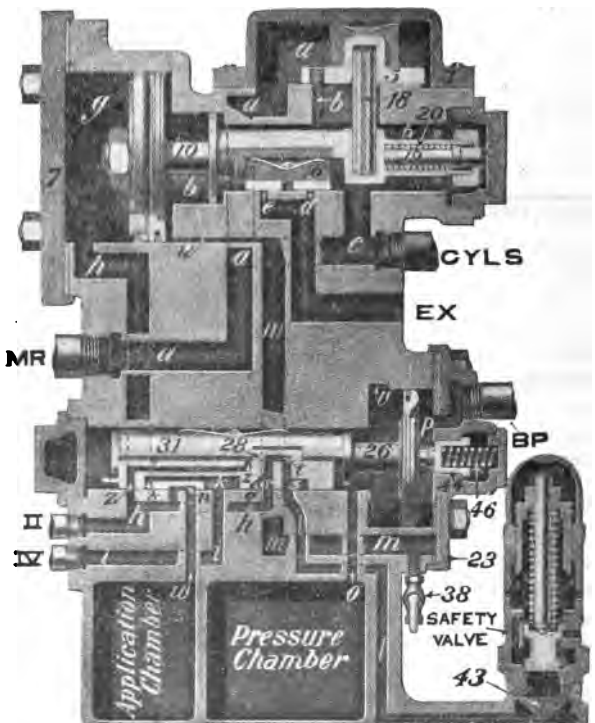

AUTOMATIC SERVICE

Digitized by Google

connection supplies brake pipe air to this portion the same as to a triple; air feeds around piston 26, through feed port *r* charging up the space around valve 31; passes through port *o* into the pressure chamber till the pressure there equalizes with the brake pipe. To make an automatic service application of the distributing valve, the brake pipe pressure is reduced, piston 26 at once moves to the right, a part of its full travel to the position shown in the view; first moving graduating valve 28 to open port *z* and closing feed port *v*. Slide valve 31 is next moved to register ports *z* and *h*, air from the pressure chamber flows through *z*, *h*, and *w* into both application chamber and application cylinder *g*, building up a pressure against piston 10. Safety valve *l* is now connected through ports *r* and *s* with *h*; this allows application cylinder air access to the safety valve. Suppose we make a 7-pound reduction in brake pipe and move piston 26 and its valves, as soon as the air in the pressure chamber and on that side of piston 26 is reduced, a little more than 7 pounds by going into the pressure chamber and *g*; piston 26 will move towards this, decreasing pressure, covering port *z* with valve 28; no more air will pass out of the pressure into the application chamber and *g*; the action in this respect is like a triple valve feeding air from an auxiliary to a brake cylinder, described on page 8.

Another brake pipe reduction will send more air from the pressure to the application chamber and *g*, till the pressures in these two chambers are equalized, after that the pressure in *g* cannot rise any higher with an automatic application. A pressure built up in *g* will operate piston 10 and its valves to send main reservoir air to the brake cylinders; exhausting air from *g* will release the brake. To release the engine brake automatically, recharge the brake pipe till its pressure will move piston 26 and valve 31; to release position air from *g* and the application chamber will then pass out under valve 31 through pipe IV to the brake valves, with both of them in running position this air can get to the atmosphere,

Digitized by Google

piston 10 will then open exhaust valve 16 and release the brake.

In the independent application and release of the brake through the distributing valve, lower piston 26 and its valves do not move, but remain in the position they have been placed in by the automatic brake valve, changes in brake pipe and pressure chamber pressures move this piston.

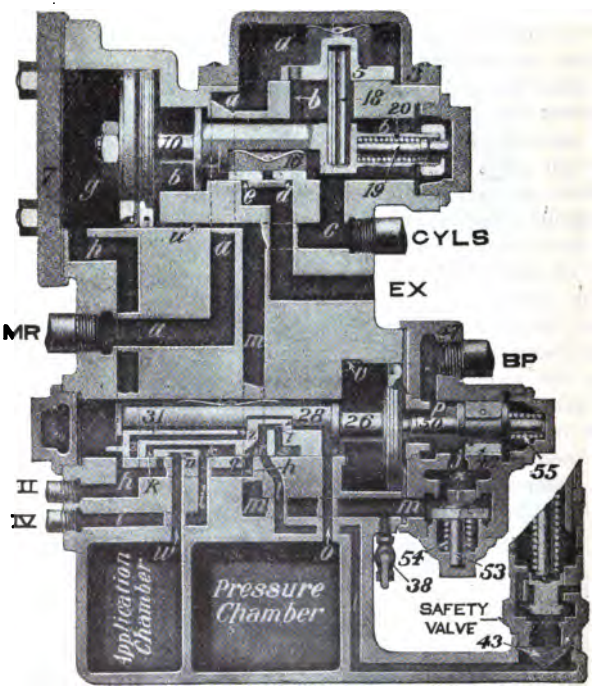

EMERGENCY POSITION OF No. 6 DISTRIBUTING VALVE WITH QUICK-ACTION CAP.

Digitized by Google

The No. 6 valve is provided with a quick-action cap 47, that can be used in place of the plain cylinder cap 23 on large passenger engines or those used in double-heading regularly. This cap 47 contains an emergency valve 48 attached to the graduating stem 50, so they move together and a rubber seated check 53, and its spring 54, that opens to admit brake pipe air to passage *m*, leading to the brake cylinder pipe at *c*. An over-reduction of brake pipe air in service application will move stem 50 and valve 48 to open port *j*, but in this application brake cylinder has equalized with brake pipe and no air will pass the check-valve 53. When a sudden and heavy reduction in brake pipe pressure is made as the first reduction, piston 26 moves its full travel, at once pushing stem 50 over against the resistance of spring 55, moving valve 48 to uncover port *j*; this makes a sudden reduction of brake pipe air that will insure the quick-action of triples on the train in the same way a quick-action triple on the tender will. When the brake pipe air equalizes with the brake cylinder, check-valve 53 closes so air can not pass back from the cylinders. Air from the pressure chamber flashes into the application cylinder and operates piston 10 to set the brake when this sudden reduction operates piston 26. Valve 31 passes over port *w* so quickly that very little air gets into application chamber, pressure chamber air equalizes with application cylinder *g only* at very near its original pressure, about 65 out of 70 pounds and sets the brake at that pressure.

If the H-6 valve is left in emergency position its maintaining port *u* will pass main reservoir air through pipe II and build up the pressure in *g* till the safety valve set at 68 pounds can control it.

In High Speed Brake service with the feed valve carrying 110 pounds instead of 70, the main reservoir pressure is usually 130 to 140 pounds; this pressure at the H-6 valve will force more air through port *w* and raise the pressure in *g* to about 93 pounds. The small opening

Digitized by Google

between *q* and *r* in slide valve 31 is just enough larger than port *w* so the air can be reduced to 75 pounds by the safety valve; this higher pressure gives a quicker stop in High Speed service. When the H-6 brake valve is put in release position, after an emergency stop, and the brake pipe pressure is built up enough to move piston 26 to release, the air in the application cylinder can then equalize into the application chamber at about 15 pounds; this will hold the locomotive brake set at that pressure till the H-6 is moved to running position, it will then fully release.

In double heading the cock under the H-6 brake valve must be closed on the following engines to give the leading engineer control of the brakes and the H-6 and S-6 valves carried in running position; this will leave the exhaust port of valve 31 open to the atmosphere so the leading engineer can use the distributing valves on the following engines, the same as triple valves on the train. If necessary to release the engine brake on the following engines, it should be done with the independent brake valve without moving the H-6 from running position. When backing up a train that is to be controlled with a tail hose, the H-6 should be carried in running position, unless the rules of the Company require another position.

COMBINED AIR STRAINER AND CHECK VALVE

There is a connection from the brake pipe to the main reservoir pipe with a stop-cock to keep it cut out when not needed, and a strainer check valve to prevent air from coming back from the reservoir; this for use on

Digitized by Google

a dead engine when drawn in a train. This connection will furnish a supply of air to operate the E. T. brake; the check valve is held down by a 20 pound spring, with 70 pounds in the brake pipe there will me 50 in the main reservoir. A choke in the check case prevents air flowing out of the brake pipe fast enough to affect the brakes. The same type of strainer check without a spring is used between the 45-pound reducing valve and the signal system. The piping diagram shows the location of these strainer checks.

When making a "two-application" stop with a passenger train and ready to make the first release; go to release position just long enough to move all the triples, then to running for an instant to allow the engine brake to release; the engineer's judgment must decide how long; you can then come to lap or service to make the second application; unless you stop an instant on running the engine brake will remain full set.

When operating the locomotive brake separately from the cars, use the independent valve, leaving the H-6 in running position. A partial or full application can be made by admitting a little or much air, and a partial release by lapping the independent valve before all the air has escaped from the distributing valve. This valve can be used to bunch or hold the slack as well as to hold the engine brake set when standing at a water plug or on a grade.

To cut out the brake pipe from the distributing valve there is a stop-cock in the branch pipe, and to cut out the driver or tender brake cylinders when disabled, there are cocks in the proper pipes. A choke fitting near the hose connection to the tender brake will hold the driver brakes set if the hose bursts or is uncoupled, as the distributing valve can feed air in faster than it can get through the choke. The choke is large enough to allow the tender brake to set and release without delay.

The E. T. equipment must be kept clean and all the pipe joints and gaskets air tight if it is to operate prop-

Digitized by Google

erly. Grit or scales from the inside of the air pipes will cut the seats of the valves so they will leak, and leaks are the puzzle of this brake. Look out for leaks across the gasket between the distributing valve and its reservoir, as they occur there often. To locate leaks to the atmosphere use soapsuds at the suspected joint. To locate the leaks into the piping from the valves, open the pipe joints at the unions between the valves, air will come out from the pipe connected to the defective valve. You can then follow it up to the source of the leak. In case of broken pipes when out on the road, if you understand the operation of the valve there need be no trouble in understanding what to do and whether the brake can be still operated. If you will remember that the distributing valve depends on the pressure of air in the application chamber to open and close the valves that control the passage to and from the brake cylinder it will make the operation of this valve clear to you. When air gets into this chamber, whether from a leak through either brake valve, the slide valve 31 or the gaskets, it will raise the pressure there and apply the engine brake. Or, if the air can pass out of this chamber either the regular way through the brake valves or leaks in the pipe connections the engine brake will release. First study out how the air gets into and out of this chamber and it will clear up many things that otherwise would puzzle you.

There are several forms of the distributing valve in service, with some differences in their construction and operation, and it is likely that other changes will be made in the valve from time to time.

38. Q. Describe the Combined Automatic and Straight Air Engine and Tender brake.

A. This brake valve contains two check valves, 8 and 9—see Figures 1 and 2—to admit air from the main reservoir to the brake cylinders and 9 to exhaust the air from the cylinders to the atmosphere. These valves are moved away from their seats alternately by the shaft 2, which when revolved to the right, forces valve 8 off its seat

Digitized by Google

against the pressure of the main reservoir, air in *a* and the spring 11; when revolved to the left forces the exhaust valve 9 off its seat against the pressure of the spring 10 and the brake cylinder air. To apply the brake the handle 4 is moved to the right. With valve 8 moved down off its seat, main reservoir air in *a* passes through *b*, b^1 and b^2 —see Fig. 3—and out at *x*—see Fig. 2— through the piping leading to the Double Check valves and cylinders. Exhaust valve 9 at this time is on its seat as shown in Fig. 2, so that no air can pass out through *c* to the exhaust. To release the brake the handle 4 is moved to the left, which allows main reservoir air valve 8 to close

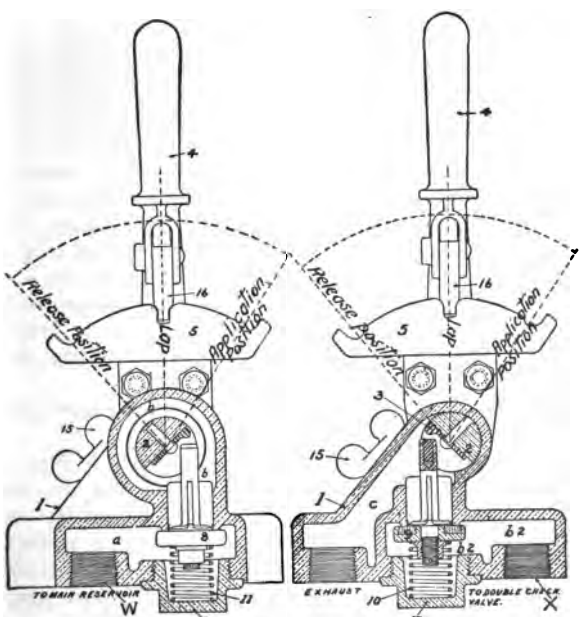

FIG. 1. FIG. 2.

STRAIGHT-AIR BRAKE VALVE.

Digitized by Google

and then open exhaust valve 9, so that air in the cylinders can pass out to the atmosphere. When handle 4 is in mid-position, both valves are closed so that they are "on lap."

A leather washer 6 prevents leakage from *b* to the atmosphere when the brake is applied; spring 7 holds shaft 2 against this washer when there is no compressed air in this part of the valve—see Fig. 3.

To regulate the pressure of the air fed from the main reservoir to this valve, a G-6 Slide Valve Feed Valve is used, located on the pipe between the reservoir and brake valve and set to close at 45 pounds. This reducing valve regulates the brake cylinder pressure to the proper amount, and also restricts the flow of air and assists the engineer in making moderate applications.

The Double Check Valve shown in Fig. 4 is located in the pipe between the triple valve and the cylinders, in a horizontal position so that it will not open or close by gravity. The triple valve is coupled to one end, the straight air brake valve at the other. The brake cylinder can be coupled to either side, as shown, one side can be used for the safety valve, or a driver brake cylinder can be coupled to each side and the safety valve located in the pipe leading to the cylinder. Two of these valves are required, one on the engine and one on the tender, with a ¾-inch pipe connecting them to the straight air brake valve, the same as the 1-inch brake pipe connects the triple valve and automatic brake valve.

Two safety valves are required, one for the engine and one for the tender, set at 53 pounds.

When the straight air is used it moves valve 5, Fig. 4, over so gasket 7 makes a tight joint at *b* and the air passes through opening *c* to the cylinders, but cannot get to the exhaust port of triple valve. If automatic is applied, air from the triple valve moves valve 5 so the opposite gasket makes a joint at *a* and air passes through ports c^1 to the cylinders, but cannot pass to the straight air brake valve. Thus you see the double check valves automatically connect the brake cylinders to either the auto-

Digitized by Google

matic or straight air system and prevent air passing out of the exhaust port of one system while the other is being operated.

When operating the straight air, move handle 4 over and you will feel the resistance of valve 8; a little practice will enable you to calculate the amount of air you allow to pass into the cylinders in a partial application; you can

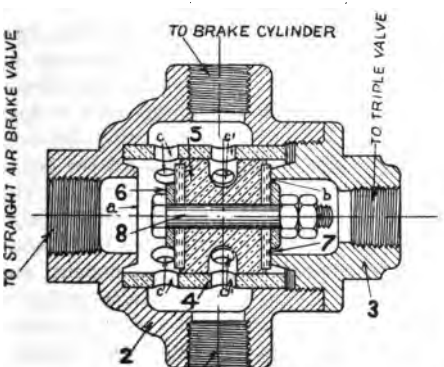

Fig. 4

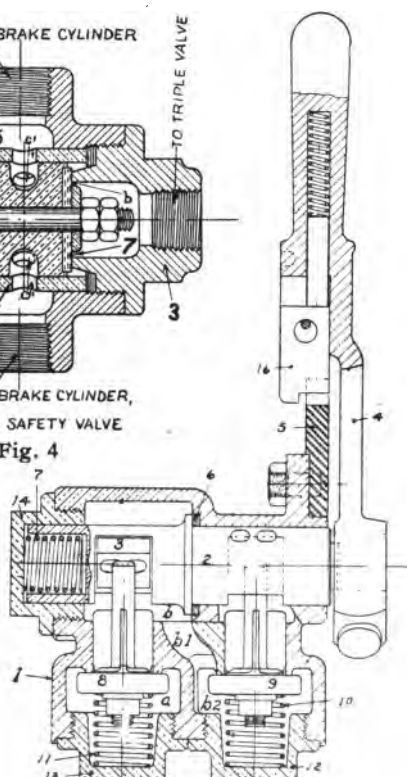

Fig. 3.

Digitized by Google

follow up by admitting additional amounts of air, till if necessary, the brake is fully applied, of course, taking care not to shock the cars attached to the engine by too sudden an application. If it is to be held fully applied leave the valve in application position, so as to feed up any leaks that may reduce the power. For a full, quick application the valve may be opened wide, as the reducing valve will stop the flow of air from the main reservoir when it reaches the pressure at which the reducing valve is set. A partial release can be obtained by opening and closing the valve 9; a quick, full release by moving handle 4 to exhaust position and holding valve 9 open.

If the straight air brake is left on lap while the automatic is applied, when the automatic is released the double check valve may be shifted by the pressure of the air that may get in the pipe between the check and the straight air valve, if the check valve shifts and closes the opening at *b* the brake cylinder air cannot get out of exhaust port of triple, and thus cause the driver and tender brakes to stick. A new style of double check valve now in service prevents this trouble. When using automatic, handle 4 should *always* be in full release position, holding valve 9 open. The automatic brake valve when not in use should be on running position and at least 10 pounds excess carried to prevent triple valves "creeping on" at any time.

Never apply both brakes at once while switching. When you use automatic be sure the other is in release position first. If necessary to use straight air on top of the automatic to hold the slack of train, when the automatic is to be released, remember that a movement of *both* valves to release is necessary to let off the locomotive brake.

If wheels skid on a good rail, test the safety valves and the reducing valve; they should relieve any over pressure, whether from a reducing valve allowing too high a pressure, or from a double application, that is, an application with the automatic while the straight air is still applied; this will give a higher pressure than if the automatic

Digitized by Google

has set full first and is almost sure to slide wheels; therefore must not be used. Straight air gives 45 pounds only in the cylinders at any time; if the automatic is applied on top of this 45 pounds, the 70 pounds in the auxiliary will tend to raise the cylinder pressure close to 65 pounds. The safety valves should reduce it down to 53 pounds.

Both safety valves and the feed valve should be tested at regular intervals with a gage to insure that they regulate the pressure properly. There should be Tees so located in the pipes that a gage can be readily attached for this purpose.

39. Q. How should the automatic brake valve be carried when backing up the train, or when expecting the trainmen to set brake from rear end?

A. On running position; so the brake will be applied as soon as brake pipe pressure is reduced, when brake valve should be placed on lap at once. This also applies to pushing a snow plow if brake is handled from the plow. A few companies require that the brake valve be kept on running position all the time, when backing up a train. There is some difference of opinion as to the proper position of the H-5 valve, some carry it on holding position and use the independent valve to release the locomotive brake. The H-6 valve can be carried in running position.

40. Q. How do you set and release the automatic brake?

A. Reducing the brake pipe pressure operates the triple valve to apply the brake and restoring the original pressure releases it; this is the engineer's method. It can be applied from the train by opening the conductor's valve, or the angle cock at the rear of last air brake car. Pulling the hose apart at the couplings, a hose bursting or any bad leak or break in the brake pipe will set the brake. When the train breaks in two between air cars all air brakes on both parts of the train that are cut in set instantly. A brake can be set on a car that is alone by opening the angle cock to let air out of the brake pipe. In such a case the brake can be released by bleeding the

Digitized by Google

auxiliary reservoir. If a brake is to be released from the train the auxiliary pressure is reduced by bleeding till it is lower than the brake pipe so the triple valve will open the exhaust port, or all the air is bled out of both reservoir and brake cylinder. Usually the release spring in the brake cylinder will push the brake piston back over the leakage groove before the graduating spring moves the triple piston and slide valve to lap.

41. Q. Can a gradual application of the brake be made, that is, with only part of its full force?

A. Yes, by reducing the brake pipe pressure only a few pounds, say five to seven pounds for first reduction; this reduction is necessary to make brake piston move over leakage groove; a lighter reduction than five pounds will not always do this; two to three pounds at each of the succeeding reductions, less than twenty pounds in all.

42. Q. Why does this reduction of only a few pounds in the brake pipe pressure make a light application of the brake?

A. With a light reduction the triple piston moves down slowly, opening the air valve slowly; the air from the auxiliary reservoir passes into brake cylinder through graduating valve and a small port in the slide valve; as soon as the auxiliary pressure is a little lower than brake pipe pressure, the brake pipe pressure raises the piston, closing the graduating valve so no more air can pass into brake cylinder, thus setting the brake lightly. To illustrate this, we will let out seven pounds of air, reducing brake pipe pressure from 70 to 63 pounds, that leaves 70 pounds above triple piston, which moves the triple piston down towards the lower pressure, opening graduating valve 7 first; then moving slide valve 3 so that air can pass through it; when enough air has gone into the cylinder to reduce the auxiliary pressure below 63 pounds, the brake pipe pressure moves the piston towards the lower auxiliary pressure, closing graduating valve; another reduction produces the same effect, each time setting brake tighter till pressures equalize. The piston

Digitized by Google

moves the main slide valve at the first reduction, but only opens and closes the graduating valve at the following reductions till a full application is made.

43. Q. How much do you reduce the brake pipe pressure to make a full service application of the brake if the piston travels are the proper length? Why does a reduction of twenty pounds set the brake "full on?"

A. About 20 pounds, or from 70 pounds down to 50, or until the auxiliary pressure has equalized with brake cylinder.

If the brake is in good order, with a piston travel of eight inches, a reservoir pressure of 70 pounds will fill the brake cylinder and equalize in both at 50 pounds, that will leave 50 pounds on top of triple piston. If the pressure on the brake pipe side or under the triple piston is any less than 50 pounds, the piston will stay down and hold the air valve open and pressures must equalize. One pound less will hold it down as well as any amount. When it has equalized, no more air will pass from auxiliary to brake cylinder, pressure on brake piston will not rise above 50 pounds, and brake cannot be set tighter. Any reduction of brake pipe pressure that leaves it lower than auxiliary pressure will set the brake tight. If a reduction of 20 pounds opens the air valve and holds it open, any further reduction will not produce any effect on it, and so far as that brake is concerned is only a waste of air, which must be supplied from main reservoir when you want to release brake. If any check valves in quick-action triples leak, a reduction in brake pipe pressure below brake cylinder pressure will let the brake leak off through this check into brake pipe.

44. Q. What is necessary to have brakes set alike, with same reduction of brake pipe pressure and release at same time, with same increase of brake pipe pressure?

A. 1st. The auxiliary pressures must all be the same to move triples down towards the same reduced brake pipe pressure. For example, if one auxiliary has 70 pounds, another 60, a reduction of brake pipe pressure

Digitized by Google

below 70 will set the first brake, but it takes a reduction of below 60 to set the other one. 2d. All piston travels must be the same, for with a 20 pound reduction a short travel equalizes at a less reduction with a higher pressure than a long travel. When brake pipe pressure is increased, triple controlling brake with long travel will release first as the auxiliary pressure is lowest. Thus, brake with long travel equalizes last with lowest piston pressure and lets go first. 3d. That all triples and brake pistons are in good order and no leaks. 4th. That the main reservoir pressure and volume are sufficient to move all triples to release quickly.

45. Q. What is the difference between the plain engine triple valve and the car or quick-action triple? Why will not the plain triple do as well on a long train?

A. A plain triple gets all its supply of air to set the brake from the auxiliary reservoir only; the quick-action triple gets it all from the auxiliary on a service application; when used with emergency it gets air from both train pipe and auxiliary. With a long train equipped with plain triples it takes some seconds to reduce the brake pipe pressure at last car and operate the last triple; the pressure in brake pipe is reduced slowly on last cars, which makes them set gradually; the brake pipe reduction is made at the engine only. The quick action triple has two separate actions; in one a service application operates only the plain part of it; in the other, plain and quick action parts are operated at once. A quick action triple is not always needed on an engine or tender, as they are so close to the brake valve that they operate quickly enough. In an emergency application the quick-action triple allows some of the brake pipe air to escape at the triple so that the brake pipe pressure is suddenly reduced at this triple; this also operates the next triple quick-action, which reduces the brake pipe pressure still more, so that all the triples act quicker than when the reduction is made at the brake valve, and all the brakes are set at nearly the same instant. Thus there is less shock to the rear cars

Digitized by Google

of a full air brake train, as the action of the triples travels from one to the other faster than the slack can run up from car to car.

46. Q. What is the emergency or quick application?

A. If the brake pipe pressure is suddenly reduced at the first application 10 pounds or more, at the quick-action triple, so the graduating valve cannot reduce the auxiliary pressure at the same rate, auxiliary pressure will move piston by the service position, the emergency part of the triple valve is brought into action, opening a large port in the triple so the air goes from the brake pipe direct into the brake cylinder, not only setting the brake quick-action, but also reducing the brake pipe pressure suddenly at that point, instead of all the air having to go clear to brake valve to escape and reduce pressure. This sudden reduction sets the next triple in the same manner, which sets the next one, and so on to the last car; its action from one car to another is so quick that even on a long train it seems to catch all at once. When a quick-action triple takes air from the brake pipe and sets the next triple quick-action, it also takes air from its auxiliary through a small port *s*, after the brake pipe has equalized, so the full application is made at 60 pounds, about 10 pounds more than the piston pressure in full service application.

If at the head end of train there are four cars with the triples, cut out at the cross-over cocks; or four cars with brake pipe only, the reduction of brake pipe pressure at the fifth car will be so gradual that it will not work quick-action; it takes a ***sudden*** reduction right at the triple to get the quick action. When there are only two or three cars behind these cut-out triples, the small volume of their brake pipe will assist in having the quick-action jump over the cut out ones. At the rear end more than four cars can be cut out and get the quick-action as the "dead end" of the brake pipe will help to make a sudden reduction on the last cars.

A sudden reduction of brake pipe pressure which will

Digitized by Google

pull the triple piston down hard enough to compress the graduating spring and let piston make a full travel will open the large air port in plain triple valve, so brake will set somewhat quicker, but does not set with any higher piston pressure.

47. Q. Explain the operation of the quick-action triple when used on the "emergency."

A. A sudden reduction in the brake pipe pressure right at the triple must be made, so the triple piston will make a full stroke and open the emergency port in seat

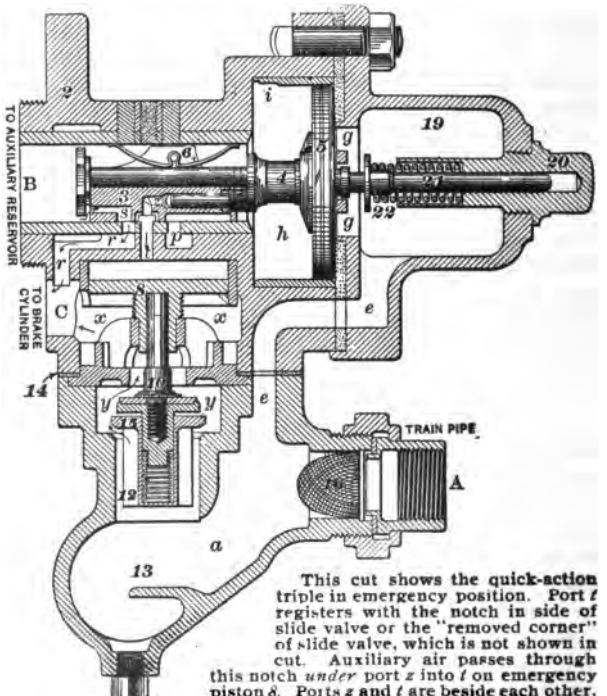

This cut shows the quick-action triple in emergency position. Port *t* registers with the notch in side of slide valve or the "removed corner" of slide valve, which is not shown in cut. Auxiliary air passes through this notch *under* port *z* into *t* on emergency piston *8*. Ports *z* and *t* are beside each other, but no air passes from port *z* into *t*.

QUICK-ACTION TRIPLE VALVE—EMERGENCY POSITION.

Digitized by Google

under slide valve, which will admit the auxiliary pressure over the emergency piston 8. This in turn pushes the emergency or rubber-seated valve 10 off its seat, and the brake pipe air can then go direct to brake cylinder through large port C, raising the brake pipe check valve 15 to do this. As soon as the brake pipe and brake cylinder pressures have equalized, the check 15 seats itself, and a spring in this check valve pushes the rubber-seated valve 10 up against its seat as soon as the auxiliary and brake cylinder pressures are nearly equalized. At the same time that brake pipe air is passing into the cylinder, the air from the auxiliary is also going through a small port in the end of slide valve 3. This port is made very small to give the brake pipe air a chance to equalize into the brake cylinder first, then the auxiliary pressure equalizes with the brake cylinder afterwards, at about 60 pounds. The emergency valve 10 is used to hold the brake pipe air out of the brake cylinder, therefore in quick-action it must be moved off its seat against the brake pipe pressure; this is done only when triple piston makes a full stroke suddenly. If it moves down slowly, the graduating valve will allow air to pass from auxiliary into brake cylinder before emergency port is opened, and reduce the auxiliary pressure as fast as the brake pipe pressure falls, so graduating spring will have power to prevent a full stroke of piston.

48. Q. Can you get the emergency action of the quick-action triple while brakes are set with a service application?

A. Not unless they are set with a light application. The pressure in auxiliary and brake pipe must be considerably higher than in the brake cylinder, or the emergency piston will not move valve 10 off its seat, nor will check 15 raise to allow air to pass through. Then, if a partial service application has been made, the graduating valve can open first, which reduces the auxiliary pressure some and retards the full stroke of the piston a little in opening the emergency port. Even if

Digitized by Google

all these emergency valves operate after a moderate service application, only a very little air will pass through them, not enough to affect the triples behind it, or raise the pressure in cylinder very much. See Q. 111.

49. Q. Is it practicable to attempt to get the emergency action of the brake by suddenly recharging the brake pipe for one or two seconds and then opening the direct application port wide?

A. No. The triple piston will not move till you have reduced the brake pipe pressure a little lower than the auxiliary pressure, and no air can pass into the brake cylinder from either brake pipe or the auxiliary till piston moves and opens the valves. By this movement you will partially release some of the brakes and may get a lighter service application the second time than you had at first. Don't try it. Unless you have time to recharge auxiliaries to 70 pounds, hang on to what you have.

50. Q. Is it safe to try and retain air in a brake pipe in the emergency application, and why not?

A. It is not safe as a general rule. In an emergency when life or property are in danger, you must act quickly, The point is to get stopped dead as soon as possible, and see about getting started afterwards. An emergency application is the last resort and you must get it when you need it. If you do not let nearly all the air out of a long brake pipe, some of the triples will not act quick enough. If three or four triples are cut out, or there are three or four plain triples close together at the head end of the train, the quick-action will not catch behind them and all the air must be let out at head end of train to reduce the pressure as quickly as possible. A full reduction of 20 pounds is necessary to set the plain triples on engine and tender so these brakes will do their full share. With a double header it is generally necessary to let the air out at brake valve of rear engine to catch the quick-action on the train. With a full train of quick-action triples a sudden reduction of 25 or 30 pounds at the engine will catch them all and leave considerable air in

Digitized by Google

the brake pipe, so you can release and back up out of the other train's way if the brake stops you in time. This is the only special exception to the general rule. It is easy to hold part of the air when making tests or in the instruction car; but when you think some one is going to get killed, it is not quite as easy as clear over to full emergency.

51. Q. How does the quick-action triple operate on a *short* train, if graduating pin is broken? Or the graduating ports gummed up?

A. With the emergency on a light service application. If the graduating pin is broken, the graduating valve will be held on its seat by auxiliary pressure, and the emergency port is the first one to open.

If the graduating valve is gummed up or dirty so the air can not flow past it properly, the triple will work with emergency when you make a moderate service application. With a long train the emergency port is opened so gradually that the air can get past the emergency piston and go to the cylinder without moving the emergency piston.

52. Q. If while making a moderate service application your brakes would "fly on" and at the same time the air would stop running for a moment from brake pipe exhaust and then begin again, where would you look for the trouble?

A. In one of the quick-action triples. This action of the brake valve shows that one of the triples is working quick-action only, in advance of the rest, even with a service application. When the triple works quick-action, it takes some air from the brake pipe, reducing the pressure so the equalizing piston seats for an instant. At the same time the black hand takes a sudden drop for an instant. Probably the graduating pin is broken, although a broken graduating pin in service is very rare. If the graduating spring 22 has been left out it is very apt to cause quick-action. If the triple piston or slide valve is gritty or badly gummed so it does not move freely, it will cause this trouble.

Digitized by Google

If the graduating valve or its ports are gummed up so that the air cannot flow past it out of auxiliary to equalize the pressures as fast as it flows out of brake pipe, this triple will be sure to work quick action. A quick-action triple that needs cleaning, or has the graduating ports defective in any way, is liable to work quick-action with a moderate service reduction. If the brake pipe exhaust elbow is gone from the brake valve it will allow so sudden reduction of brake pipe pressure that the triples will work quick-action on a very short train.

Improper handling of the brake valve will also cause triple valves to go into quick action with a service reduction. With a very long train it takes quite a few seconds to have the reduction made at the brake valve felt on the rear car. If you have overcharged the head end by full release position for fifteen or twenty seconds and then begin a service application, air is still feeding into the rear triples; this makes a reduction at the rear end and the brake valve one on the head end, the triples ahead of the middle of the train cannot keep up and go into quick action.

To locate one of these defective triples, close some of the angle cocks so as to use not over ten cars at a time, and make a moderate reduction, say five pounds, then make another of five more. If the brakes work quick-action you can be certain the defective triple is on one of these cars. After recharging, set the brake again with about seven pounds reduction, and note which brake has not set at all. Cut this one out and make another test, which will show if you have the right one. If you do not find it in the first set of ten cars tried, cut in some more and try them. The disabled triple will not always set at the first reduction, and will work quick-action at the second one: it is more apt to give trouble in a short train than in a long one.

53. Q. If with a quick-action triple, the brake should refuse to release, but kept blowing from the exhaust port

Digitized by Google

or pressure retainer, what would be the matter and what would you do?

A. The emergency valve 10 was likely held off its seat or was worn out and leaked badly. If out on the road and valve would not quit leaking after a few emergency applications, would cut out that brake. If the gasket between the triple valve and cylinder head on a passenger brake or next the reservoir on a freight brake had blown out, it would let auxiliary reservoir air into exhaust and the blow would soon be down to the capacity of the feed port in triple valve. A small leak past the emergency valve when the brake is set will soon equalize the brake cylinder and brake pipe pressures. With a sticky triple this brake might not release with increase of brake pipe pressure and wheels be skidded. Better cut out such a brake and bleed it.

54. Q. Describe tthe construction and operation of the Quick Service Triple Valve, Type K.

A. The quick service triple valve shown in the next illustration is similar to the ordinary quick-action triple in use for many years, but has some additional features. There is an additional air port *y* leading from the chamber Y between the brake pipe check 12 and the emergency valve 10, up through the triple body to the slide valve bushing at *c*. This port *c* is covered by the slide valve so any air passing through port *c* must also pass through a port in the slide valve to get any farther. The graduating valve 7 is a small flat valve with a cavity *v* in its face, this valve rides on the back of the slide valve 3 and moves each time piston 4 does. There is some lost motion between the shoulders of the piston stem and the ends of slide valve 3, so the piston can move this distance without moving valve 3, this allows the piston to move and close the feed port *i* as well as open and close the ports under the graduating valve without moving slide valve 3. On the reservoir end of the triple is attached a cage 29, containing a "retarded release" stem 31 and its spring 33. The later type of K triple is shown here, and

Digitized by Google

below the triple is shown the first style of release stem and spring. A small pin 34 prevents stem 31 moving too far in the cage when taken off. There was no feed groove in the shoulder of piston 4 where it rests against the slide valve bushing when at its extreme travel in release position in the first K triples, so that in this position, air passing through feed port *i* could not get into the auxiliary. The later ones have a groove in this shoulder. When the piston and slide valve are in *free* release position the stem 31 and spring 33 are in normal position—not compressed—the exhaust port in slide valve 3 is wide open and the feed ports open so brake pipe air can equalize to the auxiliary. In the triples used with 10-inch brakes and larger ones, there is also a feed port

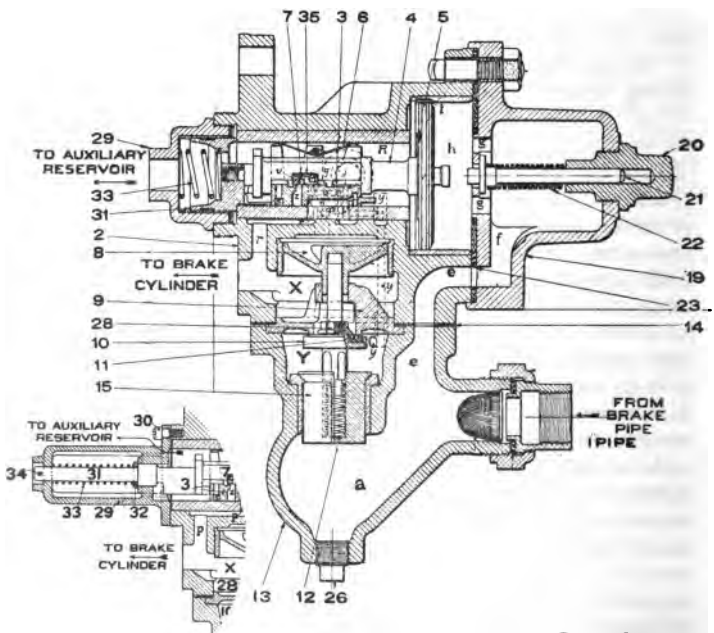

Digitized by Google

through the slide valve that is open in *free* release. There is a *small* feed port through the slide valve that is open only in retarded release position which charges the auxiliary very slowly. The feed port *i* around the piston is the same size in all quick-service triples, so most of the air in the large triples passes through the feed port through the slide valve. After the auxiliary has charged to standard pressure, which we will assume is 70 pounds, a moderate brake pipe reduction will move the piston 4 to the right following the reduction. This movement first closes feed port *i* and moves the graduating valve 7 on the back of the slide valve 3 to close feed port and open the supply ports under it. The slide valve then moves, first closing the exhaust port and next opens the service ports in valve 3 to the ports in its seat. Auxiliary air then flows to the cylinder through port *r*. At the same time brake pipe air from chamber Y flows through port *y*, a port through slide valve 3, the cavity of the graduating valve 7 and ports in slide valve 3 into port *t* in the seat, and thence around the emergency piston—which is not an air tight fit—into X and the cylinder. This small amount of brake pipe air passing to the cylinder is not sufficient to cause an emergency reduction, but causes the next triple to operate more certainly and thus applies all brakes in a train in less time than when the entire brake pipe reduction is made at the brake valve. The brake pipe air passing to the cylinder in a service application increases the pressure there so that a five-pound reduction in brake pipe and auxiliary will give about 14 pounds in the cylinder as well as applying the quick-service triples in less time from front to rear of train. The air from the brake pipe also tends to give a higher pressure with long piston travel than with the old triples taking air from the auxiliary only.

On account of the arrangement and size of the service ports the quick-service triples are not as liable to go into undesired quick action as the older form. When in quick-service position the ports are only open a portion of their

Digitized by Google

full size to reduce the auxiliary pressure as fast as brake pipe pressure is ordinarily reduced at the brake valve. If the triple piston moves over enough to compress the graduating spring 22 a little, the service ports will open wide; this reduces auxiliary pressure so fast that the piston will not go to emergency position for a moderate reduction unless it is defective. When the brake valve is placed in full release and the brake pipe at the head of the train charged much higher than the auxiliary pressures there, the quick-service triples there will move past *free* release position compressing the stem 31 and spring 33 and the slide valve exhaust cavity will be moved far enough so the wide open port of this cavity will be beyond the exhaust port and the small part of the exhaust cavity will be in register with the port. This causes the air to exhaust from the brake cylinder very slowly and the quick-service triples at the head end that have the high brake pipe pressure hold their brakes set some seconds longer than when in free release position. As the brake pipe pressure reduces farther back in the train until it is not enough higher than the auxiliary to move the triple piston to retarded release position against the resistance of spring 33, the triples will all move to free release position as fast as the increase of brake pipe pressure reaches them. On a fifty-car train equipped with the quick-service triples, about one-third of them, or fifteen to twenty will go to retarded release and those next will release quickly. This tends to release the middle and rear cars of a long train before the cars next the engine are fully released, as the head brakes are retarded, the whole train will release at about the same time, and thus prevent the slack running out and breaking trains in two or more parts when releasing brakes at a slow speed. To get the retarded exhaust of quick-service triples when the entire train is not equipped with them, these triples should be next the engine. When at the rear they do not retard the release any more than the ordinary quick-action triple.

Digitized by Google

55. Q. Describe the Westinghouse Type L Triple Valve.

A. The Westinghouse L triple valve is designed for high duty passenger service, it is pipeless, that is, all air pipe connections are made at the pressure head to which the triple is bolted; it uses two reservoirs; one the ordinary size for that brake cylinder and a supplementary reservoir about twice the volume of the service auxiliary. In case this supplementary is not to be used when other cars in the train do not have it, a cock cuts it out from the triple valve, this cuts out the graduated release feature and the *very* high pressure with quick action. The L triple is a quick-service and a quick-action valve, the quick-service feature has been explained in connection with the K triple, and the quick-action also, we need not repeat all of it here, and it is understood that the student is familiar with the action of the ordinary quick-action triple. This triple does not have the retarded release through a small exhaust cavity that the K triple has, therefore does not use a retarded release spring, the exhaust cavity is in the graduating valve, and is of the proper size to exhaust the brake cylinder air in the standard time. The exhaust valve is under control of the engineer, who by changes in the brake pipe pressure and the aid of the supplementary reservoir, can allow all the brake cylinder air to pass out freely, or hold it back and reduce the cylinder pressure a little at a time till down to nothing; by the control of the exhaust you can have a moderate cylinder pressure at the instant the stop is made.

Two sectional views of the actual valve, a side elevation and an end elevation and a diagrammatic view of the valve in full release and charging position are shown.

In release position, or when running between stations both reservoirs charge at the same time and to the same pressure through the L triple. There is the usual feed groove *i* in the cylinder bushing to allow air from the brake pipe to pass around the triple piston; it is a small

Digitized by Google

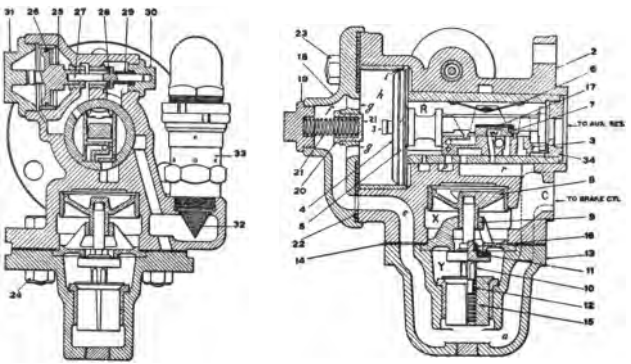

THE TYPE L TRIPLE VALVE.

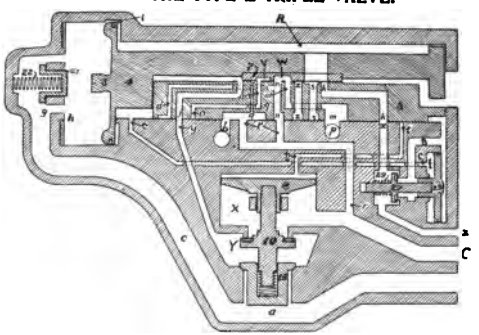

FULL RELEASE AND CHARGING POSITION.

one, more to keep the brake pipe and auxiliaries equalized after charging than to do much of that work. There is a charging port *j* through the slide valve; open in release position only, that connects with cavity Y above the brake pipe check 15; air can pass by check 15 and go through the slide valve 3 to the reservoirs, but check 15 prevents it getting back to the brake pipe during a reduction. When a service application begins, this charging port in slide valve 3 is first closed as well as the port *k* leading to the supplementary through *x*, so no air can get

Digitized by Google

out of there, air from the service auxiliary only is used in a service application, supplementary air remains bottled up till the triple goes to release position, when this large volume of air at standard pressure will quickly equalize with the service auxiliary at close to the standard pressure, even before the brake cylinder air has escaped; this makes a quick recharge from the supplementary to the service auxiliary. If 90 pounds is carried, after a full service application the service auxiliary will have 70 pounds, and the 90 pounds in the supplementary will equalize in both of them at over 83 pounds, air from the brake pipe will soon put the other 6 pounds in.

Referring to the diagrammatic view, all the air ports, passages and cavities in the valve and seat are shown; something that cannot be done in the view of the actual valve as many of the ports cannot be made to show in a correct sectional view. Air from the brake pipe enters at the lowest passage through *a*, *e* and *g* to *h*, forces the triple piston 4 to release and charging position, if not already there, and passes around the triple piston, through port *i* into R and the auxiliary reservoir. Air also passes through port *k* in slide valve 3 and *x* to the supplementary so it charges at the same time as the service auxiliary. Brake pipe air raises check 15 and goes through port *y* in the body of the valve and its seat, thence through port *j* in slide valve 3 to R, so air is passing into R from two sources. Port *j* is larger in the large triples than in the small ones, but feed-groove *i* is the same size in all of them. Any air that may be in the brake cylinder will pass through C, *r*, *n*, in valve 3, then through cavity *w* in graduating valve 7 into port *m*, and finally into P, the final exhaust. You will note that exhaust air must pass through a cavity in graduating valve 7, this will explain why a movement of the graduating valve will open and close the exhaust. *t* is the emergency port through which auxiliary air passes in over piston 8 when slide valve 3 is back in emergency position. There are two pistons in this triple that operate only in an emergency application,

Digitized by Google

piston 8 that does the same work as piston 8 in the ordinary quick-action triple and piston 25, called the by-pass piston, its duty is to open by-pass valve 27 to allow air in the supplementary to equalize with the service auxiliary in an emergency application. This piston is shown at the top in the actual triple. During a service application the auxiliary pressure remains equalized on both sides of piston 25 so it does not move. In an emergency application slide valve 3 moves back far enough so port *c* registers with *d* in the slide valve, this opens a communication between *f* on the inside of piston 25, through *c*, *d*, *m* and *r* to the brake cylinder; auxiliary pressure in B forces it over and opens valve 27; this allows supplementary air to flow to the auxiliary and equalize at very nearly the standard auxiliary pressure. If, at a service application, an emergency arises, a sudden reduction of brake pipe pressure at the brake valve will put the L triples into the emergency position, the by-pass valve will be opened and the supplementary air will pass into the brake cylinder and service auxiliary giving a high braking pressure, which the safety valve will hold till released the regular way. Port *b* connects with safety valve 33 in release and all service positions so the safety valve can blow down cylinder pressure to its adjustment at ordinarily 62 pounds. In an emergency application cavity *q* travels past port *r* so the brake cylinder is cut off from the safety valve and there is no escape of air at the safety valve in an emergency application, all the air is held in the cylinder till the brake is released the regular way.

In a graduated service application there are two positions of piston 4 and slide valve 3, the first one is quick-service position; in this, port *o* in valve 3 is brought in register with port *y* in the seat, so air passing check 15 can flow through *y* and *o*, graduating valve 7 being moved back at that time air from *o* will pass through the small cavity *v* in graduating valve 7, through the small port into cavity *q* and thence to C and the brake cylinder, this

Digitized by Google

makes a gradual brake pipe reduction at the triple and starts the other triples in the rear of it, to *service* position quicker than the brake valve reduction would. Port *z* in slide valve 3 has been brought in register with *r* in the seat, graduating valve 7 having uncovered *z* at the top, auxiliary air also flows to the cylinder at the same time air from the brake pipe passes in. As soon as the auxiliary pressure is a little lower than that of the brake pipe and the reduction at the brake valve is stopped, the auxiliary reduction gets ahead of that in the brake pipe at *h* so piston 4 moves towards the right carrying with it valve 7 closing ports *z* and the small port into *q*, this stops the flow of air into the cylinder and holds it there. Another gradual reduction at the brake valve produces the same effect, till the pressures are equalized between the auxiliary and brake cylinders.

If the train is a short one the piston and slide valve pass by the quick-service position to what is called full service position in which port *o* in valve 3 moves past port *y* in the seat so no air passes that way and port *z* is opened full width to *r*, this takes auxiliary air to cylinder faster than in the quick-service position and tends to prevent the triple going into quick action on a short train. In quick-service position knob J on piston 4 touches the graduating stop 21 without compressing it, in the full-service position it compresses the spring a little till its resistance will stop piston 4, this also aids in preventing quick-action applications with a service reduction. It is the graduated or "step-down" release that requires the most study to understand. During a brake application the supplementary still holds the standard pressure we had at the beginning of the application. When the triple piston 4 and the slide valve 3 move to the right at the release, exhaust port *n* is in register with *r* in the seat, cavity *w* in valve 7 allows air from the cylinder to pass out through *m* to P. At the same time port *k* in the slide valve is in register with *x* in the seat, so supplementary air feeds into R and the service aux-

Digitized by Google

iliary. If the brake pipe pressure in *h* has been raised by the brake valve being left in full release so it is higher than the supplementary can equalize with R, piston 4 will remain in rull release. But if the brake pipe pressure is raised a few pounds and the brake valve lapped, as soon as the supplementary air coming through port *k* can raise the pressure in R higher than the brake pipe pressure in *h*, piston 4 will move back carrying graduating valve 7 with it, closing port *k* so the pressure in R will not rise any higher and closing port *m* so no more air can pass to the exhaust from the cylinder, this allows part of the cylinder air to escape, how much, depends on how long the exhaust cavity *w* connects ports *n* and *m*. Valve 3 is not moved, as the raise in pressure in R is only sufficient to move piston 4 and valve 7, when port *k* is closed and stops the rise in pressure. Another recharge of the brake pipe and lapping the brake valve will move piston 4 and valve 7 so ports *k* and *m* will be opened and more air will exhaust from the cylinders, these recharges at the brake valve and exhausts at the triple will continue until all the air has escaped from the cylinder. After slide valve 3 has moved to release, it is a movement back and forth of the graduating valve that opens and closes exhaust port *m*, supplementary port *k* and brake pipe port *j*. The older makes of triples have the exhaust cavity in slide valve 3, the L triple has the exhaust cavity in graduating valve 7. This explanation and the illustrations will give a good idea of how to operate this triple, so we will not speak further of its operation.

This type of triple valve is being modified and improved from time to time so we may expect it to do still more in the future than it does now.

56. Q. How do you locate a leak that lets off the brake?

A. If it leaks off through piston packing leather the air will blow out of the hole in spring case or lower head in push down brake; with a pull up brake, around piston

Digitized by Google

rod or through the vent hole in top head. A leaky brake pipe check valve 15 will let the air out of brake cylinder into the brake pipe, but only when brake pipe pressure is lower than cylinder pressure. This will be the case when hose bursts or train breaks in two, or engineer reduces the brake pipe pressure too much. In ordinary service stops, leaks at this point do not affect the work of the brake.

A test for leaky brake pipe check valve 15 in the quick-action triples can be made at the brake valve. Reduce the pressure 20 or 25 pounds from 70, and if the air comes out full and strong and the equalizing piston seats its valve promptly without a leak, make another reduction of 15 or 20 pounds more. With this reduction the brake cylinder will have about 50 pounds and brake pipe 30. If any brake pipe check valves leak, the 50 pounds will try to equalize with the 30, and make it more than the pressure above equalizing piston, which will raise and let air blow out of exhaust as fast as it comes past the check valve.

To locate a leaky rotary or any leak in brake valve that lets off the brake, set the brake; close the cut-out cock at once; brake will stay set and black hand will raise or brake pipe exhaust open. Then open cut-out cock and brake will release through exhaust port of triple.

To locate a leaky graduating valve, set the brake with a light application; it will release through exhaust port of triple about as quick as you can lap the brake valve. Then, after recharging the auxiliary, set with a full application and brake should stay set.

When a leaky graduating valve lets off the brake with a light application, it is because the air from the auxiliary leaks past the seat of valve 7 into the brake cylinder until the auxiliary pressure is enough lower than brake pipe pressure so triple piston will move slide valve up into exhaust position, releasing air from brake cylinder through the exhaust port. This it cannot do with a full application, as in this case the air pressure has equalized

Digitized by Google

between the auxiliary and cylinder, so a leaky valve cuts no figure; air will not pass through after pressures are equal. A leaky piston ring in the triple makes this matter worse, as the brake pipe and cylinder pressures can equalize and stick the brake. A leaky triple usually is in bad order in other ways.

57. Q. If the brake is defective and leaks off through piston packing, or any leaks in piping to brake cylinder, is it any advantage to let all the air out of brake pipe in such a case?

A. It seems to make a leaking brake hold a little longer, but it is so short a time that it does not help very much to stop the train. A gage put on this brake cylinder will show that it only holds for a few seconds, and during that time with a light pressure. The proper way is to stop the leak.

58. Q. What makes the driver brake so slow to take hold if coupled to a train when it works all right if engine and tender are working without a train?

A. Generally it is because it leaks somewhere, so the air leaks out without setting the brake when a light reduction is made for the train brake. See about the leaks the first thing. The piston packing leather gets dry and hard from being so close to the fire box and it needs soaking up with oil frequently in the summer time. Tallow and oil is good to put in driver brake cylinders, as it does not evaporate so quickly as oil and keeps the packing leather soft and pliable. To test for leaks, set the four-way cock in plain triple for straight air (if possible); or set the straight air; this will give you time to go around and find the leaks. If the piston leather leaks, the air will blow out of hole in the spring case or lower head of push-down brake. Using the brake valve on direct application position for service stops will sometimes kick the driver brake off, after setting the train brake. This is because when you use the direct application port to set the brake you make a heavier reduction at head end of the brake pipe than at rear end. The head end

Digitized by Google

triples equalize for this reduction; air from rear end rushes up after you close the brake valve and releases head triples. This is another reason why the direct application should never be used unless you want the emergency action of every brake.

59. Q. Why does the tender brake sometimes stick and refuse to let off till auxiliary is bled a little, when all the other brakes on the train release promptly?

A. Generally because not enough excess pressure is carried. Always carry a sufficient excess if you want the automatic brake to work properly. Overcharging the head end of a long train will usually make the head brakes apply and if the brake pipe pressure drops a little they will stick till kicked off by going to full release for a few seconds. Some old tenders have 12 x 33-inch auxiliary reservoirs for an 8-inch brake cylinder; if, in this case, the piston travel is short, the brake piston pressure is six or seven pounds higher than other brakes equalize at and brake pipe pressure must be raised correspondingly higher to release tender brake. Then the tender triple gets more sand and dirt in it than any other triple, which causes it to wear and get defective. A leaky triple piston packing ring will allow any brake to stick unless very high excess is used, as it will let air equalize past the triple piston into auxiliary without moving piston up to exhaust position.

60. Q. If the brake pipe is charged up with a high pressure from main reservoir when brake is released for a second application stop, will the brake set again at once with a small reduction of brake pipe pressure?

A. It will not set again until the brake pipe pressure is reduced below the auxiliary pressure. For example: If the brake has been set tight, the auxiliary pressure will be about 50 pounds for the first application; if you turn 90 pounds into brake pipe you must let 40 pounds out again, to draw brake pipe pressure below 50, before the triple piston will move; all this time your train is getting nearer the stopping point. This is one of the

Digitized by Google

reasons why you run by when trying to make a stop this way; it takes so long to draw your brake pipe pressure down where it was before. In case you expect to apply the brake at once after releasing it wholly or partly, put the brake valve on full release for an instant, just long enough to charge up the brake pipe its whole length, and then put it on lap. This movement will release triples and hold your brake pipe pressure so near the auxiliary pressure that the triple is ready to act instantly with light service application. This is the proper method of making partial release if you are going to stop too soon or expect that slippery track will skid the wheels just as the final stop is made.

61. Q. Why are some of the train brakes more likely to stick on a *long* train after a light application than after a heavier one?

A. Because after a light application the pressure has been reduced so little in the auxiliaries that the main reservoir does not have enough more pressure to move all the triples. A light reduction on a long train does not always move all the triple pistons and their feed ports remain open ready to take brake pipe air, which holds the brake pipe pressure down. With a heavy reduction the triples all operate, no feed ports will be open till triples release and the brake pipe pressure will raise higher at the moment of releasing brakes. This is a trouble peculiar to long trains only; small main reservoirs and sticky triples with leaky packing rings make it worse.

62. Q. Is it possible to let off part of the brakes and leave part of them set?

A. Yes. After a full application this can be done, especially if brake pipe pressure has been reduced much more than 20 pounds. When you go to full release, if the brake pipe is not at once charged up above the highest auxiliary pressures by the main reservoir air, as soon as the brake pipe pressure is a little higher than the lowest pressure in any auxiliary, its triple will move up into exhaust position, releasing that brake. Then this auxiliary

Digitized by Google

will begin to recharge through feed port and help hold brake pipe pressure down till that auxiliary and the brake pipe are charged up high enough, when another brake will let off; and so on until all are let off. The brake with longest piston travel usually lets off first, because it has the lowest auxiliary pressure; this operation takes place after a full application when piston travels are unequal. When pumping off the stuck brakes you have to raise the pressure in all the auxiliaries of the released brakes as well as in the brake pipe. When you think the brakes are releasing in this manner, lap the brake valve and pump up the excess; when this is turned back into the brake pipe they will usually all let go. Do not attempt to work steam, you will risk a break-in-two.

63. Q. Why do some of the brakes creep on when the train is running?

A. Because there is a leak that takes air out of the brake pipe; this leak may be in the brake pipe, triple valve or auxiliary reservoirs. It can also be on account of the auxiliaries not having all equalized after releasing the brake. The auxiliaries at the head end of train will charge to a higher pressure on full release than the rear ones; when the brake valve is moved to running position the higher auxiliary pressure will cause the head triples to move to service position. If air is fed into the brake pipe faster than it leaks out, the brakes will not creep on. If air sanders use so much air that the pump can not supply air to hold up main reservoir and brake pipe pressures the brake will set; this is a main reservoir leak taking air out of brake pipe.

64. Q. How can these brakes be released the quickest and surest way?

A. If a main reservoir leak reduces brake pipe pressure, shut off the escape of air if possible and run the pump faster till brake pipe pressure is raised so brakes will release. If a leak from brake pipe sets the brake, see that you have excess pressure first, then turn it back into brake pipe by moving the brake valve handle from run-

Digitized by Google

ning position to full release just long enough so the rush of air from main reservoir will charge up the brake pipe, and putting it back to running position before any of the auxiliaries are charged any higher. This forces the triple valves of the sticking brakes up into release position, so air from brake cylinder exhausts and does not give time to raise the pressure in any reservoir. Sometimes this must be done a second and third time to release all of them. If brake valve is held on full release long enough to charge a reservoir higher than the standard brake pipe pressure, that brake will be sure to set as soon as brake valve is returned to running position. This is the case when the feed ports are too large in proportion to the auxiliaries that they supply.

65. Q. If governor is set at 70 pounds with D-8 valve or any brake valve of that type, and brake pipe is charged from main reservoir higher than that pressure, is the brake apt to creep on?

A. Yes; the pump is stopped and will not start again till brake pipe pressure is lowered to 70 pounds. The excess valve will remain shut so no air can pass into the brake pipe, and if there are any leaks the train pipe pressure will drop. During this time brake is pretty sure to go on.

66. Q. How can this be avoided?

A. By not allowing main reservoir to charge brake pipe and auxiliaries at over 70 pounds. When standing at a water tank, or any stop, with brakes set, the main reservoir pressure is apt to run very high. If all of this is turned into brake pipe and allowed to equalize at over 70 pounds, with brake valve carried in full release regularly, there is no way to prevent the brake setting if brake pipe leaks. In this case, set it a little and at once release it; this will reduce the brake pipe and auxiliaries below 70 pounds, so pump will go to work and you can hold brake off.

67. Q. In making a stop how should you release the brakes on a freight train? On a passenger train?

Digitized by Google

A. On a freight train, not till it has entirely stopped, or you run the risk of train breaking in two. The brake pipe pressure on a long train is increased next the engine first; hence brakes let go there first; even if it is only a few seconds sooner. Part of the shock is from unequal piston travel, which gives unequal piston pressure; brakes with long piston travel let go first after a full application. With a "part air" train the slack of entire train runs up against the head cars; releasing brake while train is moving slowly, is liable to part the train; working steam before slack is all evened up in train is sure to break it in two. The ET brake and K triples will hold the slack against the engine. Using pressure retainers on the head end of such a train or the Straight Air brake on engine will hold the slack all bunched till all triples have released when retainer handle can be turned down or engine brake released.

With a passenger train, release should be made just a few feet before the train stops, so there will be just enough power to stop the train and avoid tilting the coach truck forward at the instant the train stops. If the brake beams are hung from the body of the car the truck will not tilt forward, but there will be a shock at stopping if the brake power is severe.

68. Q. Why should a brake on a short passenger train be let off just before coming to a full stop?

A. Because, as most all coaches have outside hung brakes, the brake shoes pull down on the forward end of the truck and push up on the back part of the truck and thus tilt the truck; if brake is not let off until after the train stops, when the truck rights itself it rolls the wheels back a little and throws the body of the coach back, annoying the passengers, even if it is not severe enough to throw them against the seats. This trouble is not felt so plainly by the engineer when he has a good driver and tender brake, as the brake on the coach is what jerks the coach. Then less power is required to stop a train going very slow, as at the instant of stopping, than when run-

Digitized by Google

ning at full speed; if power enough is left on to hold a train at full speed, it must stop very forcibly at slow speed. The brakes should begin to release about half a rail length from where the train finally stops; a little farther if going very fast, a little less if a very slow stop is being made. Practice will teach you the distance.

There is an exception to this rule in the case of a very long passenger train, say over twelve coaches, especially if it is not vestibuled and the buffer spring slack all taken up solid between the cars. Experience will teach you that in stopping a train of this length less shock will be given the front end of train if brake is held on moderately tight just at the instant of stopping till train stops; i. e., handle a very long passenger train about the same as a freight train of the same length.

69. Q. How should a "two application stop" with a passenger train be made?

A. Make a full application when running at a high speed so as to have a high brake power at high speed. When the speed is reduced to 15 or 18 miles an hour, and you are stopping short of the desired point, go to full release for an instant, just long enough to start *all* triples to exhaust, with the ET brake, stop on running position for an instant to partially release the engine brake, then begin the second application at once by a moderate reduction which should set all brakes at a moderate power. You can increase the brake power with another reduction so as to stop at the exact point, and, if necessary, leave the brake set without having power enough to tilt the trucks and shock the passengers. This method reduces the risk of sliding wheels, as brake is set tight at high speed when wheels do not slide, then let off and set with less power at slow speed. With the L type triples the brake can be released a little at a time just before the stop.

70. Q. Describe the position of the handles to all valves and cocks in the air brake and signal equipment, whether open or shut.

Digitized by Google

A. All the handles, except to angle cocks, stand at right angles or crosswise of the pipes when they are open; parallel to pipe when cut out, plain triples and pressure retainers follow the same rule, their handles are horizontal or crosswise when cut in. The crooked handle of angle cock is parallel with pipe when cut in. This is so the hose will protect handle from being struck by anything flying under the car and getting shut off, as the old style straight handled cock is liable to. A small groove square across the end of plug shows whether cock is open or shut, as the groove runs same way with hole in plug.

71. Q. Do you understand that all air cars in a train should be connected and brake pipes charged with air, whether brakes are cut in or not? Why?

A. Yes. All brake pipes should be coupled up and air working through them, so that if the train breaks in two anywhere in the line, all brakes will be set that are working. Interstate Commerce Commission rules say so.

72. Q. What should be done with a car on which the brake pipe is broken?

A. If it cannot be plugged at leak and allow air to pass freely to cars behind it, it must be switched behind all other air cars; have air in hose that is coupled to next car in front; brakeman should look after that car and all behind it. If you have two ¾-inch air brake hose, the signal hose can be taken off signal line, brake hose put on, and signal line used for brake line through that car to get air back to other cars.

73. Q. If the pipe at one end of the car should come loose, would you consider it dangerous? Why?

A. Yes. If the pipe at end of car gets loose so cock will bounce up and down and strike the handle end of plug against the dead wood or any part of car, it is liable to work shut gradually. This is caused by the spring which holds the plug in its seat, turning the plug a little each time it strikes. If the spring is wound one way, it works open; if the other way, it works shut. The later

Digitized by Google

style of angle cock handle prevents the plug turning around.

74. Q. 1. After coupling to train why should you not immediately try to apply the brakes for inspection? 2. How long should you wait?

A. Because you must wait till a full pressure of 70 pounds is stored in auxiliaries so a full application of brakes can be obtained to get the piston travel. The time you should wait depends on the pressure maintained in the brake pipe from the moment of coupling on; if 70 pounds is held steadily, two and one-half minutes is the shortest time for some of the older makes of triples. The triple valves of late design charge to 70 pounds in about seventy seconds. The pressures must be equal in all the auxiliaries, even if it takes longer before testing. When the governor stops the pump with the standard pressures shown on both hands of the gage it is usually long enough.

75. Q. Should the train brakes be inspected? How? When? Why?

A. Yes, by applying them with full service application in the same manner as for a station stop with a moving train; then examine each car to see that the piston travel is the proper length and that there are no leaks that will let brakes off; then release them and examine each car to see that all release and that there are no leaks through exhaust port. They should be inspected at all terminals and tested whenever train breaks in two, or cars are taken on or set off, as the wrong angle cocks may be closed or left closed at such points. This is necessary because it is not safe to depend on a brake till it is shown that it will set and release properly. Hand brake should always be let off before testing. If pressure retaining valves are tested they should be turned up after the first test is completed, a reduction of ten pounds made in brake pipe, and the brake pipe recharged to release the triples. The retainers should then be examined to see that they are all quiet; handles should then be turned down. If they are

Digitized by Google

in good order the air held in brake cylinder will come out as soon as handle is turned down. If no air blows out the retainer is useless, look for leaks at pipe joints and brake cylinder packing.

76. Q. Would you consider a train safe to leave with if the brakes had been tested by opening angle cock at rear of train? How would this affect your main reservoir pressure?

A. No, sir! not unless some other test has been made. This would not set all the brakes unless the brake valve was on lap. It would draw down main reservoir pressure and waste air without doing any good. This test is only good to show that air hose are coupled, angle cocks open and brake pipe charged from engine to last car.

77. Q. If with 70 pounds brake pipe and auxiliary pressure you release the brake and apply it again immediately, would you expect to obtain the same power you had before? How long would it take to regain the original pressure?

A. No, sir! *never.* About forty seconds, if main reservoir had 35 or 40 pounds excess over auxiliaries, sometimes less time. The feed ports in triple valves which regulate the time of charging are not always the proper size for the reservoirs they supply. A short train and light application would reduce this time to twenty or twenty-five seconds. Generally it takes longer than the tests show it with everything in good working order, for the feed ports are not always clean and strainers free. The pressure at which auxiliary equalized after first application is what you begin with on second application after first release, generally it is fifty after first full application; with full release of brake and immediate application you get thirty-five and a little more on second full application; the third time you will have less than 30 pounds piston pressure.

With the High Speed brake pressure of 110 pounds you can make two successive applications with 20 pound reductions and a release between before you get down

Digitized by Google

to 70 pounds with the type L triple, the supplementary reservoir recharges the service auxiliary almost instantly.

78. Q. Can an auxiliary reservoir be recharged without releasing the brake?

A. No, not if the triple valve is in good order. The ports are so located in the triple valve that the feed port through which auxiliary is charged does not open till after exhaust port is open, which releases the brake first, recharge the auxiliary afterward. By the use of a pressure retaining valve, which holds some of the air in the brake cylinder, the auxiliary can be recharged without releasing the brake entirely. If an auxiliary is recharged *before* the triple is moved to exhaust position, brake pipe pressure will not be able to move the triple, and the brake must be bled off.

79. Q. Why does it take so long to regain the original pressure in the auxiliaries after releasing brakes?

A because the feed port in the triple through which the air passes from brake pipe to auxiliary is small. This feed port is shown at *m* in the plain triple, and at *i* in the quick-action triple. It is necessary to have this port small for two reasons; first—when setting the brake, the feed port must be small or when brake pipe pressure is reduced at brake valve for a light service application, the auxiliary air could flow around the triple piston through the feed port *i* as fast as it is taken out of brake pipe; so triple piston would not move. If the feed ports were larger, when brakes are to be released, it would be impossible to charge up a long brake pipe from the engine and hold the pressure up quick enough to release all the brakes at as nearly the same instant as possible, as the first few ports to open would take some of the brake pipe air and hold the pressure down; if they were large enough a few of them would do this. The quick-service triples and L triples are now arranged to help this matter out. See questions 46 and 55. These feed ports must be the proper size for the auxiliaries they supply, so different sized auxiliaries will charge to the same pressure

Digitized by Google

in the same time from the same brake pipe. The auxiliary reservoir for a 10-inch coach brake holds about 3,100 cubic inches, that for an 8-inch freight brake holds about 1,620 inches; therefore a feed port for a 10-inch brake reservoir must be the right size to pass nearly twice as much air through in the same given time as for an 8-inch brake. This is the reason for using only the proper triple for each reservoir. Then the reservoirs are a certain size for the brake cylinders they supply, so an auxiliary pressure of 70 pounds will equalize with brake cylinder of 8 inches piston travel at 50 pounds. This in turn gives a standard piston pressure for which to arrange the brake leverage on each car or engine, so as to get the full effective braking power. The older style of plain triples, F-24, used with 8-inch engine brakes, have feed ports the proper size for 12 x 33 auxiliaries. This gives a quicker recharging and a prompter application with these brakes in switching service. If engine brake creeps on from this cause when coupled to a train they are easily released from the brake valve as they are close to the brake valve and main reservoir. The present style of plain triples, G-24, have the proper sized feed ports for the 8-inch brake.

80. Q. Where are leakage grooves located? What are they for? Is it necessary to allow for them when applying the brake? How do you do this?

A. Leakage grooves are small grooves cut in the inside of brake cylinders at the top or side. The later freight brake cylinders have them at the side. When the brake piston is in release position this groove is uncovered so that a small amount of air passing into the brake cylinder from a very light application, or when the brakes are creeping on, will escape through the groove without moving the piston. When the triple valve is in release position any air that gets into the cylinder from leaks can pass out through the exhaust. They also prevent the brake holding when the piston travel is taken up too short. In old equipment they are long enough so that a

Digitized by Google

piston movement of three inches is necessary to cover the groove, in later equipment they are much shorter. It is necessary to allow for them at the first reduction by making it strong enough so that the brake piston will go far enough at the first movement to cover the groove. Five to seven pounds reduction should do this; a short train does not take as heavy a reduction as a long one. The leakage groove must be covered at the first reduction or the air passing into the cylinder will be wasted, a number of small reductions will waste all the air so train cannot be stopped. This is a common fault in operating the brake. If the hand brake is set on a coach or the piston travel shortened so the leakage groove is not covered, that brake will not hold.

81. Q. Does the difference in travel of pistons in brake cylinders increase or decrease your braking power? Why?

A. Long piston travel decreases the braking power because it gives less air pressure on piston, short piston travel gives higher piston pressure. With light applications this difference is more marked than with a full application. A 10 pound reduction will apply a 4-inch travel brake solid, while it will not give any braking power with an 11-inch travel. With 8-inch piston travel, 70 pounds auxiliary pressure gives 50 pounds on piston per square inch. An inch difference in the travel make close to two pounds in pressure, thus 7 inches would give nearly 52 pounds, 9 inches a little over 48 pounds. The piston travel can be correct with a heavy car and high leverage, and the shoes will not clear the wheel much when released. If levers and brake beams spring much with 8-inch travel, the shoes will not have much slack when let off. Brake levers may catch on something so piston travel is correct and shoes not touch the wheels. With the straight air brake or the distributing valve the piston travel does not affect the pressure on the brake piston, as these valves do not take air from an auxiliary as the triple valve does.

Digitized by Google

82. Q. How do you cut out the brake on engine and tender without interfering with the train brake?

A. By turning the four-way cock in top of old style plain triple so the handle is at an angle of forty-five degrees; this will lap all ports and allow no air to pass from brake pipe or auxiliary to brake cylinder; see that brake is entirely released first, and open bleeder in auxiliary. With the later type of engine triple the cut-out cock is in the cross-over pipe, so closing the cock cuts out the triple. Open bleeder in auxiliary so the brake cannot creep on from a leak in the triple. To cut out the locomotive brake from the distributing valve, shut the cock in the pipe leading to the cylinders. To cut out the *automatic* action of the distributing valve close the cock in the brake pipe connection.

83. Q. What is the difference between cutting the air out from a car and cutting it out from a brake?

A. Shutting the angle cock at the end next engine cuts out that car and all behind it; shutting the cross-over cock between brake pipe and triple cuts out that brake only and allows all the rest to operate.

84. Q. If one brake beam under a car was broken how would it affect that brake? How would you cut out the brake on that car and allow air to pass to other cars?

A. If one brake beam or rod is broken, the brake on that car is useless and it must be cut out by shutting the cock in the cross-over from brake pipe to triple, or by turning the four-way cock in plain triple. This will allow air to pass through brake pipe to other cars without operating disabled brake. Be sure the brake with plain triple on either engine, tender or coach is released before four-way cock is turned, as no air can get out of brake cylinder after cock is turned. All quick-action brakes can be bled by opening the bleeder in auxiliary reservoir and allowing all air to escape, as the cut-out cock does not close the communication between brake cylinder and the bleed cock in auxiliary.

85. Q. In going down a long, steep grade how would

Digitized by Google

you handle the brake to control the train? Why is it necessary to recharge the auxiliaries on a hill? How is this done?

A. Air braked trains on a long, steep grade must be taken down at a moderate speed in order to control the train; much less brake power will hold it at a slow speed than a fast one. If the train once gets the start of you it may not be held at all. Run slow enough so you will not need all the brake power to *steady* the train or you will not be able to stop when necessary. When first passing the top of a long, steep down grade, set the brake and see *if you can stop;* if satisfied, release and go on, if not satisfied the brakes will hold train, call for help and get stopped.

Leaks in brake pipe, auxiliary, or brake cylinder pressures make it necessary to recharge; very few if any trains are absolutely air tight. If brake pipe leaks, the brake will set at full power, which should stop the train; this will call for a release and recharging to standard pressure. Auxiliary or brake cylinder leaks will reduce the braking power so train will run away; to avoid this disaster it is necessary to recharge the auxiliaries frequently; you can then hold the auxiliary pressure up close to the standard amount all the way down the hill and have plenty of brake power. As triple valves release a brake and recharge the auxiliary afterward, to hold the brake set while auxiliaries are recharging, pressure retaining valves are used, which hold some of the air in the cylinder after triple has gone to release position. Before starting down the grade turn up the handles or retainers, use as many as possible and not have them stop the train at any of the let-ups in the grade. The more retainers used the less hot wheels, as the holding power is on a greater number of cars; if the full brake power is used on any cars all the way down a long hill the wheels are liable to get so hot as to damage them. Make a moderate application at first; when the train slows down, release and leave brake valve in full release position to recharge as quickly as possible,

Digitized by Google

which should not take over forty-five seconds. On the next application, a light reduction will usually steady the train, as with retainers used the pistons are over the leakage grooves and considerable pressure held in the cylinders. Light reductions give more power to brakes with retainers working than heavy reductions without the retainers; this saves both brake pipe and auxiliary air. Pick out places where sharp curves or let-ups in the grade slow up the train to recharge auxiliaries. Air braking on a long hill should be learned on that particular hill—no exact rule can be set down; the instructions here given are general. To test the brake power developed on various cars, feel of the wheels at the bottom of the hill when possible; cold wheels on some cars and hot wheels on others show unequal braking power. Use the independent engine brake while recharging, this will help hold the train.

86. Q. What is the difference between handling a long train having part air in front and one entirely of air?

A. A great difference. It requires more skill and practice to make a good stop with a part air train than with a full air train. With part air you must be careful to bunch the train so slack will run up easily against the air brake cars before setting the brake very tight; this takes some seconds. If you make a second reduction before the rear end feels the effects of the first one, the two light applications make one heavy one, as far as the shock to the rear cars is concerned. When backing up, extra care must be taken, or train will break in two and merchandise be damaged in cars. With a full air train the first reduction of brake pipe pressure takes so much longer to start all the triples to work that you must wait about as much longer after the brake pipe exhaust stops flowing before making a second reduction. With a long all air train and new empty cars with short piston travel, or coaches on the rear end, it is a good rule to apply the brakes before shutting off steam, while the train is stretched, this prevents the higher power brakes at the

Digitized by Google

rear pulling the train in two. The brakes are longer in releasing, and this requires more time after releasing before the train runs free.

87. Q. If you had a freight train with "part air" cars in operation and you used the emergency application, would it make any difference whether the slack was out or not? In case there was a shock, on what part of the train would it fall?

A. Using the emergency brake with part air train always sets the head end hard and solid; if slack is all run up against the engine the shock is not as great. In any case the rear end gets all the damage; the weakest cars and draft gear behind air cars suffer. Empty flat cars next the air are likely to be wrecked.

88. Q. Which engineer should handle the brakes in double-heading, and what should the other engineer do?

A. The leading engineer should handle all the brakes when double-heading, as he is the only man who can see clearly all the signals and the condition of the track ahead, so as to act promptly to stop the train when necessary. The following engineer should shut the cut-out cock under his brake valve, which should be in running position with the 1892 valve, on lap with the H-5 valve, on running with H-6, keep the pump running and a full supply of air. If there is no cut-out cock, place brake valve on lap so no air can get into the brake pipe from his main reservoir and plug up train pipe exhaust elbow, so that when head engineer releases brakes the brake pipe air will not escape through second brake valve. If cut-out cock works open or is left open so main reservoir air feeds into brake pipe; when the leading engineer makes a service reduction the air from the following engine will hold the equalizing piston of head engine up so that brake pipe exhaust will blow strong and continuously. If head man is sure that second engine is feeding into the brake pipe when brakes are to be set, he should go to emergency at once, whistle for brakes, get stopped or have second cut-out cock closed. The

Digitized by Google

emergency port of first brake valve will take air out of brake pipe faster than the second pump and reservoir can supply it, especially if second valve is on running position.

When testing the train brakes from a double-header, be sure that main reservoir air of following engines is cut out from brake pipe and that the test is properly made from leading engine.

If the rules allow it and a definite arrangement is made between the engineers, the second man can assist in releasing stuck brakes or in charging auxiliaries by opening his cut-out cock when signaled to do so with brake valve in full release. As soon as train is moving cut-out cock should be shut so the leading engineer can stop the train at once if necessary.

The rule to carry brake valve on running position with cut-out cock shut varies on different railroads. One prominent system requires that the brake valve be carried on emergency position so that in case of necessity brake will go on at once if cut-out cock is opened. Rules of your own road apply in this case to position of valve.

89. Q. What would you do if an air hose burst? How would you know it? Should you have extra hose? Of what kinds?

A. Put brake valve on lap; whistle out a flag. If in a dangerous place to wait, or when a train is close behind, shut the first cock ahead of bursted hose; let off brake on head end from engine; bleed the cars behind bursted hose; get to a safe place and replace the bursted hose with a new one. If with bad grades or all air train, put in a new hose anyway, if possible. It would be known at once, because brake would set; black hand would drop way down; main reservoir pressure would also run down quickly. Put brake valve on lap to save your main reservoir air. To locate the bursted hose put brake valve on running position just so you will keep a little pressure in the hose and trainmen can hear the air blowing out of bursted hose and find it.

Extra hose chould be carried on engine, one of each

Digitized by Google

kind used. Trainmen should have a standard brake hose, a signal hose and one double-end or splice coupling to use in case drawheads or coupling of cars are so long the regular hose and couplings will not meet each other.

90 Q.. What course would you take should your train break in two and set the brakes?

A. Put brake valve on lap, shut off steam, whistle out a flag, shut the open angle cock on rear end of last car connected to engine, let off brakes on head section from the engine. When they are released and you get a signal to do so, back up to rear section; after coupling up to it, if brakes cannot be let off from engine, bleed a few of the sticking ones at back end of train until train can be started. Be very careful to shut the bleeder as soon as air begins to escape from triple exhaust port or you will set some of the others, and that will hold the train longer than necessary. All air bled out is wasted; it is done only to save time, which is valuable in a case of breaking in two. If you break in two or burst a hose on a bad grade, shut both angle cocks next the opening in hose, this will save any air that leaks past the triples into the brake pipe and hold leaky brakes set till you are ready to release them to move the train.

91. Q. Do you know what the pressure retaining valve does? And how? If the pipe leading to this valve should break off would you plug it? If you did, how would it affect the brake?

A. The pressure retaining valve holds some of the compressed air in the brake cylinder after the triple valve has moved to exhaust position. It is attached to exhaust port of triple valve by a piece of pipe and placed where it can be conveniently reached when train is in motion. When set to operate, its handle is turned up to a horizontal position, which closes the direct opening, so the air goes out slowly under a weighted valve; and then passes out of the case of valve through a small opening so air escapes slowly. When pressure falls to 15 pounds per square inch in brake cylinder, this valve shuts off the

Digitized by Google

escape altogether and holds the air in there, keeping the brake set at 15 pounds; this allows the auxiliary reservoir to be recharged to full pressure again. It is used on long, steep grades. If the pipe leading from the triple valve exhaust to the retainer was broken off that retainer would be useless. The pipe should never be plugged, as that brake would not let off at all; there would be no way for the air to get out of the brake cylinder.

The old style retainers held 15 pounds; there are other styles now made with heavier weights to hold more. A later style has two weights, by placing the handle in one position both weights come on the valve, in another position only one weight bears on the valve, this varies the pressure at the will of the trainman, who turns up the handle with 50 pounds as the maximum.

92. Q. When air blows out steadily from the pressure retaining valve, should it be closed or left open?

A. Left open by all means. The air that blows out there comes from a leak in the triple valve; shutting the pressure retainer only stops air coming out there and sets the brake, or if leak is a small one, makes it go out through the leakage groove in the brake cylinder. If pressure retainer is turned up, even if the brake does not set right off, it will stay set when engineer sets it and tries to let it off. Never turn up retainers unless you want to hold the brake set the next time engineer releases it. If the pressure retainer is broken off or the pipe leading to it from triple is broken or leaking badly, it does not affect the operation of the brake in any way, except that the retainer cannot be used on that car. If retainer is broken off and pipe plugged the brake cannot be released at all from the engine, as there is no way for air to escape from triple valve exhaust. If there is a leak in pipe from triple valve to retainer, the retainer is of no use, as air will escape from the pipe at leak when retainer is set to work. Sometimes the pipe to pressure retainer gets stopped up so air cannot get through it, in which case the brake will set once and not release till bled off.

Digitized by Google

It is not unusual to find nests of insects in the pipe right at retainer. Pressure retainers are put on all freight cars used in interchange service. Very few coaches have them, only those running on mountain roads. Sleepers and official cars usually have retainers. They are used on level roads extensively to hold the slack bunched in a long train; in this case they are usually applied to the driver brake triple valve and located in the cab in easy reach of the engineer, the straight air brake and ET brake are much better. They are valuable aids in making smooth stops with freight trains at water plugs.

93. Q. How does the air signal operate? If the air signal on the engine whistled each time you released the brakes, what would be the trouble? If the whistle blows frequently when not in use, what is the matter? If it blows one long blast? If the whistle is weak on engine will it usually help it to blow out the signal hose on the rear of tender?

A. The air signal valve on the engine is operated by a reduction of pressure made in the signal line. This signal line is supplied with air from the main reservoir which passes through a reducing valve set at a much lower pressure than the standard braking pressure, so the operation of the brake will not interfere with the operation of the signal. The opening through the reducing valve is choked down to restrict the flow of air into the signal pipe and allow a reduction to be made in its pressure. This reduction must be a *sudden* one, like an emergency reduction for the triple valve, or the reducing valve will feed air into the signal pipe as fast as it is taken out at the car discharge valve. When the pressure is reduced in the signal line at the car discharge valve and this reduction extends to the signal valve, it affects the pressure in chamber A above the diaphram 12 first, so that the pressure in B under the diaphram lifts it up, also raising the discharge valve 10 off the seat at 7, which allows the air to pass to whistle.

If the diaphram gets bagged down, the pressure in B

Digitized by Google

will raise the baggy part of the rubber and valve will not raise off the seat.

The stem of valve 10 has the sides flattened, except for a short distance at the top, where it enters bushing 9, when this stem rises the flattened part comes above bushing 9, and air from B also goes to the whistle, this reduces the pressure in B. When the car discharge valve is closed and the signal line pressure is increased by the reducing valve, as the stem of 10 makes a moderately close fit in the top of bushing 9, air passes into B slowly while recharging. Chamber A is therefore charged up first so diaphram is sure to set valve 10 promptly.

If the fit of the stem at the top of the bushing is too loose the valve is liable to rise on its seat so the signal will "repeat" and give more than one blast for each pull of the car discharge valve.

This fit must be exact or the signal valve will not always respond on both long and short trains to the proper reductions.

If an air signal whistles each time brake is released with standard braking pressure, it is a sign the reducing valve is dirty and stuck open, so air goes back into main reservoir from signal line each time main reservoir pressure is reduced in recharging train. In this case signal line has main reservoir pressure. Clean the reducing valve before the air signal hose bursts. The whistle will give a shrill sound if pressure is too high. If the spring in the old style reducing valve over diaphram is too stiff it will do this. The improved reducing valve is regulated for the proper pressure in the same manner as the feed valve on F-6 brake valve. The reducing valves are set at about forty-five now; the old valves were set at twenty-five pounds. This is so as to carry a lower pressure in signal line than is used to operate the brake. To test the pressure at which reducing valve operates, shut off the pump, reduce the main reservoir about five pounds at a time through brake valve till the signal whistle blows; this shows that the reducing valve is held open by the

Digitized by Google

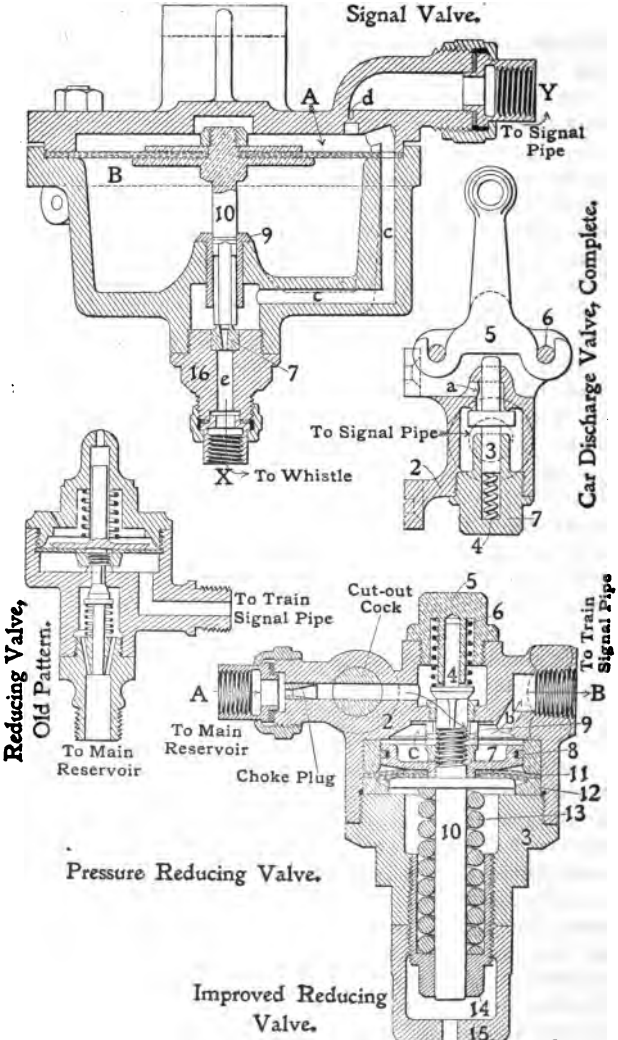

Digitized by Google

spring so air can pass from signal pipe into main reservoir. If the signal whistle blows frequently when not in use, there is a leak somewhere, which the jar of the engine may open for an instant, or the reducing valve may be out of order. If it sticks a little in its seat, as in cold weather, a very small leak will cause the whistle to give a strong blast—or a jar may unseat signal valve. When it blows one long whistle some of the valves on engine are stuck, or the car discharge valve is opened a second and third time before the whistle stops blowing the first blast; the pressure in signal line must equalize each time between the blasts to make it work accurately. If the stem 10 makes too close a fit in bushing 9 the whistle will give only one blast for two or more reductions of signal line pressure, or a very small leak in the signal line will cause signal valve to operate at intervals, when a proper fit would allow it to work properly. If the whistle bell works loose so it does not make a clear sound, or is located near partly opened windows so a strong draft of air blows across it, when train is running fast, the sound will be very weak. Blowing out the signal hose at rear of tender gives all the valves a chance to make a full opening and clean out the dirt. To test the signal line for leaks, shut the cut-out cock at the reducing valve; if the signal line leaks, the whistle will blow as soon as the leak reduces the pressure. On a double header both whistles should sound for the same reduction of signal line pressure. If they do not, close the cock in the reducing valve on the following engine so only one reducing valve will be feeding into the train signal line and thus allow the car discharge valve to do its work properly. With both reducing valves cut in the signal valve will not always operate on the leading engine when the brake pipe reduction is made from the rear cars of a long train.

With the ET locomotive brake, the same reducing valve is used for the independent brake valve and the air signal system. There is a non-return check valve in the

Digitized by Google

signal pipe so the air can not get back from the signal pipe when the independent valve takes air to apply the brake as it would sound the whistle. This valve is shown at question 37.

FOR TRAINMEN

94. Q. When coupling the engine to an air brake train, equipped with quick-action triples and already charged with air, which angle cock should be opened first?

A. The one on engine always, so as to fill the hose from engine. If cock on car is opened first, the train brake is liable to set with emergency action. Get in the habit of opening the cock on engine first, whether train is charged or empty.

95. Q. When coupling an empty car to other cars already charged and working, how should the angle cocks be opened?

A. Open the one on empty car first, so the empty brake pipe and empty hose will be connected. Then open the angle cock on the charged car slowly so the pressure in brake pipe will not be reduced any faster than the engine can supply it. This will prevent the brakes setting on head end of train, which they will do with emergency action if angle cock is opened suddenly. A little practice will teach you the advantage of this. This applies to coupling up the air on a train that has been separated to open public crossings. When coupling to cars on a side track that are going with your train, make the air brake connections also, so the auxiliaries will be charging ready for operating the brake while you are getting out on the main track, this will save time in testing the brakes, as they will be ready when train is all coupled up. When air braked cars are to be set on a coming train, charge these cars with air from the engine used to place them on the train, it saves delay.

96. Q. If an angle cock at head end of train is only

Digitized by Google

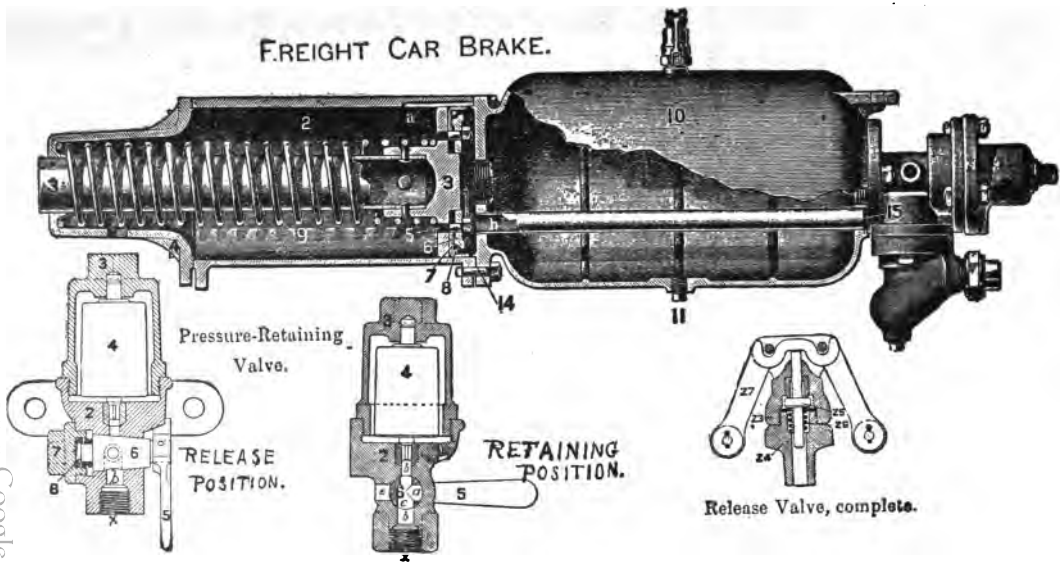

Digitized by Google

partly opened or there is an obstruction in the brake pipe, how will it affect the operation of the brake?

A. The brake can be set with service application, but it releases very slowly as the air does not get back fast enough to move all the triple valves to release promptly, and any triples with defective packing rings back of the obstruction will be sure to stick. With angle cock on tender partly open, you cannot always get the emergency action of the brake. When passing over the top of the train, angle cocks can be inspected, as they are generally far enough outside the end of car so the handles are visible from top of car. When cocks are wide open the handles are exactly over the hose. The old style plug shut-off cocks come in the straight pipe just under the end of car and cannot be seen when passing over the cars.

97. Q. Can an air brake train be made up so it will be impossible to get the emergency action of the brake from the engineer's brake valve?

A. If there are four cars with the brakes cut out at cross-over near triples, or four cars with brake pipe only, or with plain triples, next to the engine, the reduction of air pressure in brake pipe will be so gradual on the fifth car that you cannot get the emergency application of the quick-action triples. It takes a sudden reduction at the first quick-action triple to get the emergency. Switch the plain triples among the quick-actions; you may need them to make a sudden stop in an emergency.

98. Q. Why should train brakes be tested before leaving a terminal or any point where the make-up of the train has been changed? How should this test be made?

A. So you will know before starting out that the brakes will work when necessary. After coupling the engine on the train the pressure should be equalized in all the auxiliaries, so all the brakes will set at the same reduction of brake pipe pressure. The pressure should be 70 pounds in the auxiliaries in order to get a full application of the brakes to test the piston travel. While the engine is charging the train to standard pressure, which

Digitized by Google

will take some time on a long train, a careful inspection should be made for leaks, and to see that all brake pipe cocks, cross-over cocks and pressure retainer handles, are in the proper position to operate all the brakes. When standard pressure is reached the brakes should be applied from the engine that is to handle them with a full service application made in the same manner as when making a station stop of the moving train. The trainmen or inspector will then examine each brake to see that it is set with not less than five nor more than nine inches piston travel. When all brakes are inspected, if they are set properly, he will give a signal to the engineer to release brakes and examine each brake to see that they have released properly. If any brakes require adjustment of piston travel it must then be done. Be sure to close the cut-out cock in the cross-over while doing any work on the levers or shoes, so the brake will not set and injure the workman, opening it when adjustment is made. If pressure retainers are to be used, they should be tested after the piston travel is tested, by applying the brakes with a 10 pound reduction, with retainer handles turned up. As soon as the retainers are quiet, go along and turn down the handles, the air should blow out from each of them, which shows that they hold the pressure in cylinders. Long freight trains can be tested by two inspectors, one at each end working towards the middle of the train till they meet. On passenger trains equipped with the air signal, the signal for releasing after a test should be given with the car discharge valve from the rear platform of the last car.

99. Q. How can the piston travel on a freight car be tested and then taken up the proper length when car is not charged with air and brake operated?

A. See that the push rod going from piston to brake cylinder lever is clear in against the bottom of piston sleeve. Make a mark on the push rod even with the end of the sleeve. Set the brake by hand as tight as possible, with a club if necessary; the distance push rod is pulled

Digitized by Google

out of the sleeve is the piston travel. There is generally over an inch more piston travel when car is moving than when standing; it is more with heavy braking power on a car than with light. The piston travel on an empty car may be very short, say four inches, and when loaded the same car may have nine inches. When testing from the engine, have the brakes set with full service application, so you will get full piston travel.

100. Q. If the brake sets tight when you are charging the auxiliary reservoir with air when first coupling the hose to another car, should you cut out that brake?

A. If it is a quick-action triple it is a sign that air leaks through some of the joints or valves in the triple into the brake cylinder. Have the engineer set and release the brake suddenly, once or twice; if there is dirt on the rubber seat of the emergency valve which causes the trouble, it will sometimes blow it off; if it does not make the brake work all right, very likely some of the gaskets are leaking badly; in such a case cut it out and bleed it. With the freight brake there may be a leak in the pipe from the triple valve to the brake cylinder which passes through the auxiliary reservoir, nothing can be done on the road for a leak of this kind but cut out the brake. Most always in these cases the air blows out of exhaust port or at the pressure retaining valve. With the plain triple the plug cock in triple may be turned out for "straight air." This will allow the air to go direct from brake pipe to brake cylinder; none of it will come out of exhaust port, as the triple is cut out from brake pipe and cylinder. In this case cut it in for automatic. If the handle is gone, or put on wrong, examine the marks on the end of plug which show which way the air openings are and you will know which way to turn the plug. If this plug cock leaks, the air can get past it from brake pipe to brake cylinder. If brake will not work after one or two applications, cut it out. With all plain triples the brake should be released first, although the plain triple used on freight equipment is built to bleed the brake

Digitized by Google

cylinder when brake is cut out. Sometimes this bleed hole, which is in one side of plug cock in the plain freight triple valve, gets stopped up, in which case it may be necessary to let all the air out of the brake pipe—set this triple for straight air which will bleed brake cylinder, after which cock in triple can be placed in cut out position.

101. Q. If the piston travel is too long or too short what effect does it have on the brake as to its holding power?

A. If it is too short it will not cover the leakage groove, and air will leak out of cylinder; it must travel three inches to cover this groove. If it is too long it will strike the cylinder head, which will get the force instead of the brake shoes; it must travel twelve inches to do this. All brake pistons on coach, freight and tender equipment of standard gage have 12-inch piston stroke, but should not have over 8 or 9 inches piston travel. The piston travel should be adjusted equally so the braking power will be equal on all cars. Unequal piston travel gives unequal braking power. This is the cause of many severe shocks to long trains when first applying the brakes, and still more severe shocks when releasing the brakes at a slow speed. For instance, if some of the brakes have only five inches piston travel, when the engineer makes the first reduction of brake pipe pressure to apply the brakes, those with short travel will set hard enough to take up the slack of train quicker than the other brakes with long piston travel. A first reduction in applying the brakes is at least 7 pounds, less than this will not apply all the brakes on a long train. This will give a pressure of 23 pounds on the piston with 5-inch travel, 8 pounds on one with 9 inches travel, one with 10 inches travel will not show any pressure at all, the shoes will just come nicely up to the wheels. A few short travel brakes can give serious shocks in a train that are plainly felt at the rear end.

Digitized by Google

102. Q. If air blows past piston packing so freight brake leaks off, can it be fixed on the road?

A. Sometimes this is from want of oil in the cylinder; if the oiling plug near back cylinder head where it makes a joint with cast iron auxiliary reservoir is taken out and four or five tablespoonsful of black oil put in, it will soften the packing so it will be tight. The piston sleeve should then be turned around one-half turn to bring the softened packing to the top of the cylinder. This should be attended to by car inspectors, but is not always done. In no case should oil or water be put in the hose and be blown back into the triple with the air. It will carry the dust and sand back in the pipe towards the triple; this stops up the strainers, and if any gets by the strainers it spoils the rubber seat of the emergency valve, and cuts the triple to pieces very fast. Putting oil in the hose will destroy the efficiency of the brake in very short time.

103. Q. How can the air signal whistle be operated from the cars most successfully?

A. By allowing just enough air to escape at the car discharge valve to reduce the air signal line pressure clear to signal valve on engine, so that it will operate promptly, then allowing car discharge valve to close and remain closed till signal line is recharged to standard pressure; this sometimes takes two seconds. A heavier reduction with a longer interval between pulls is needed for a very long train than a short one. The whistle will give only one blast if the car discharge valve is opened a second and third time before the whistle stops blowing the first time.

If you make a second and third reduction before the reducing valve on engine has had time to charge signal line to standard pressure, the second and third blasts of whistle will be very weak; in cold weather the reducing valves do not always work perfectly. Sometimes when a car discharge valve is opened, a sufficient amount of air will seem to blow out there, but on account of an obstruction near the brake pipe Tee under car it does not

Digitized by Google

reduce the pressure enough at the engine to operate the signal valve, and the whistle cannot be operated from that car when it works from other cars. If the whistle blows once when engine is coupled to train and cannot be sounded afterward, look for a bad leak near rear end of train.

If the whistle cannot be sounded from any cars back of a certain car, the cock in back end of that car is shut, or brake pipe is stopped up so you cannot make a sudden enough reduction there to affect the signal valve on the engine. If one blast of the whistle is used to start the train without using any additional signal, remember that one blast of the whistle can be given (without opening car discharge valve) when you do not want the train started. For instance, if the signal hose has been uncoupled (without the knowledge of the engineer) for any purpose; when the cock is opened enough air goes into empty hose to sound the whistle, giving signal to start the train before the man coupling hose can get out from between coach platforms. Other causes may cause the whistle to give one blast when not intended, therefore it is not always safe to use one blast of the whistle when standing still, to start the train.

104. Q. If hand brakes are used on part air train, on which cars should they be used?

A. On the cars next behind the air braked cars so the hand brakes will hold these cars and prevent slack running out of rear cars when air brakes are released. In case of an emergency, all hand brakes should be set on cars that do not have air brakes working. Care should be taken that hand brakes are released on rear end of a part air train first, air brakes last, when running forward and in the reverse manner when backing a train.

105. Q. On an air braked passenger train in case the engineer whistles for brakes what is the trainmen's duty?

A. Open tthe conductor's valve first. An angle cock may be closed which prevents the engineer applying all the brakes. If the air escapes freely and the brake goes

Digitized by Google

on, let hand brakes alone. If no air escapes from brake pipe the brake may have already been set. Try the hand brakes last, if the brake is set with air pressure you can not move it by hand on any cars where the hand brake sets opposite to the air brake. If it is not set with air you can set it by hand, the air may have leaked out of cylinder.

106. Q. How do leaks affect the operation of the brake on a car or coach?

A. If the brake pipe leaks the brake will continue to set tighter after the first reduction till full set. Leaks at the gaskets in the couplings can be stopped by putting in new gaskets. Do not pound the guard arms of the couplings as that will likely cause the hose to tear off in a break-in-two. This leak affects a single car or a short train more than a long train, as a short brake pipe has less volume of air to leak out.

A leak from the brake pipe past the seat of the emergency valve will allow the brake pipe air to equalize with the brake cylinder when the brake is applied so the triple slide valve has closed the exhaust port; this may stick this brake especially if the triple piston packing ring also leaks.

Any leak from the auxiliary which makes that pressure less than the brake pipe will move the triple to exhaust position; the air in cylinder will escape through exhaust. With a leaky packing leather the air will blow past it, coming out around the piston rod or sleeve; none will come out of the exhaust.

107. Q. Where should you look for the trouble if the brake applied properly, but would not release?

A. Very likely the pressure retaining valve was closed; examine it first to be sure it is open. On some sleepers and official cars both the triple valve and retainer are concealed by the reservoirs and lockers, so it is necessary to hunt them up beginning with the triple exhaust, and if any pipe is attached following it up. If the retainer pipe is stopped up or plugged no air can come

Digitized by Google

out of triple exhaust. In cold weather the water from drip valves of steam heated cars may splash over the exhaust ports of triple valve and freeze on; this may stop up the exhaust.

Levers or rods may catch on bolt heads or other projections under the car and hold the brake after the air has exhausted from cylinder. If the release spring in cylinder is broken the piston will not move back. Stopped up strainers at the triple have been known to prevent release of brake; air would pass out of valve, but could not return quickly.

108. Q. In case a brake is noticed to be sticking regularly, can you help it to release at the same time the others do?

A. Short piston travel may cause this trouble. By extending the piston travel it will lower the auxiliary pressure on a full application so the triple is more likely to move up promptly. As brakes are more apt to stick on the rear of a long train than when next the engine, this car can be set ahead if necessary to use its brake.

Leaky triple packing rings and choked strainers will also cause this trouble. Better cut out the brake than risk spoiling the wheels. Report this defect to the proper party.

109. Q. How does the water raising system used on Pullman cars operate?

A. This system has so many modifications and is so complicated that a full description cannot be given here. There is an air reservoir which is charged with the air up to brake pipe pressure, sometimes directly from the brake pipe; at other times from the brake auxiliary reservoir; the latest method being to take air from the brake auxiliary. To regulate the flow of air into this air storage reservoir there is a governor and non-return check valve; the latest pattern of which is here shown. The governor operates exactly like an air pump governor and should be set at 60 pounds so it will not interfere with the air brake pressure when that is below 60 pounds. In this

Digitized by Google

same valve is a non-return check 38, to prevent air coming back from the air storage reservoir, the stem of which is made a neat fit at *h* so the air will feed past it slowly and not take air too fast. Between the air

WATER PRESSURE GOVERNOR VALVE.

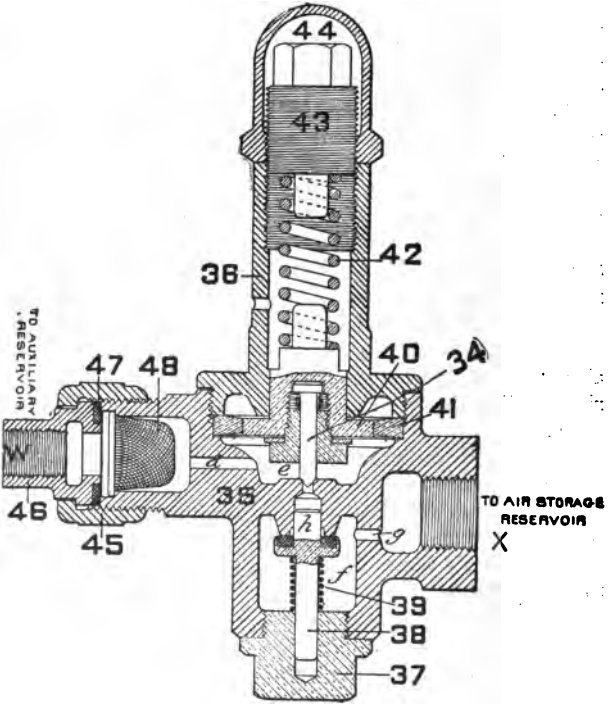

storage reservoir and the water reservoirs is a reducing valve similar to the one used with the air signal, set at 20 pounds, which pressure is sufficient to give a good flow

Digitized by Google

of water to the basins. If this reducing valve is set at too high a pressure or gets dirty or stuck open so it does not operate, the full pressure of the storage reservoir will be in the water tanks, which not only uses too much air, but is liable to splash the water all over the basins when faucet is opened. The pressure in the water tanks operates this reducing valve. When the tanks are to be refilled the air supply is shut off, that in the tanks is allowed to escape and water put in. When air comes out into the basins with the water it is a good sign the water is nearly gone. If no water or air comes out when you are sure there is a proper air pressure, examine the numerous cocks to see if any of them are closed. As the cars are not all piped exactly alike it is usually necessary to trace the pipes up and locate the stop cocks and valves when making an inspection. There are also heating pipes connected with the devices of the water raising system to prevent freezing up. Gages are usually located up in the cars which show the air pressure in the storage reservoir and water tanks, 70 in the former after charging fully, and 20 in the water tanks. Suitable cocks under control of the porters are provided to open or close the passage of air from brake system to the water raising system with a code of rules for operating these cocks.

110. Q. How does this water raising system affect the operation of the brake?

A. When air is passing from brake pipe or auxiliary to air storage reservoir it takes a little time to charge the storage reservoir. If at that time brake is applied as when making a terminal test of train brakes, air passing from the brake pipe will set the brakes tighter; if it goes from the brake auxiliary it will likely release that brake, especially if set with a light application. If the non-return check valve leaks back after air storage reservoir is fully charged, this air can flow in the brake pipe if so connected and release all the train brakes. If the connection is made to the brake auxiliary, a leaky check valve will allow the volume of the storage reservoir to

Digitized by Google

be added to that of the auxiliary and skid the wheels on a full application. If all the stop cocks are not properly operated and the valves in good order the work of the brake may be interfered with, which shows that it is absolutely necessary that they should be inspected at regular intervals by competent men and be maintained in proper order. If the governor which restricts the flow of air from the brake system is in perfect order and set at the proper pressure, unless a large amount of air is used by the water system, the operation of the brake will not be materially affected. If air is taken from the brake system during the application of the brake it is sure to affect the work of the triple valve, either to apply the brake harder or release it.

The widespread use of this system requires that coach inspectors inform themselves as to its construction and operation, and that trainmen and porters comply strictly with the rules for its operation.

111. Q. Can you get the emergency action of the brake with the pressure retainer holding 15 pounds?

A. Yes; if the triple is in exhaust position, with brake pipe and auxiliary equalized at 70 pounds, when a sudden reduction of brake pipe pressure is made, it will move the triple piston full stroke, opening the emergency port. With air at 70 pounds pressure in auxiliary the emergency piston, having only 15 pounds pressure under it, will be forced down at once, the brake pipe air pressure will still be so much above 15 pounds that brake pipe air will flash into the brake cylinder, and this sudden reduction made by the triple will affect the next triple so it will work quick-action also. Question 50 explains why quick-action can not be had after a moderate service application. The use of retainers interferes so little with the quick-action that the emergency action will jump over as many cars with the brakes cut out at the cross-over cocks with all retainers holding 15 pounds as when retainers are not being used, provided the triple valve starts from exhaust position and auxiliary recharged to 70 pounds.

Digitized by Google

THE HIGH SPEED BRAKE

For ordinary speed, below thirty miles an hour, the 70 pound automatic brake is able to control the train in the ordinary manner, but when the speed is much higher, more power is required in proportion as the speed is higher. It is the friction of the brake shoes on the wheels that arrests tthe speed of the train and finally brings it to a stop. In addition to arresting the momentum of the train this friction must also arrest the rotary motion of the wheels turning around at high speed; this takes considerable brake power. There is a difference in the amount of the friction of the same shoes and wheels at different speeds, it being greater at a low speed than at a high one.

What is called the co-efficient of friction, which is the proportion between the brake power applied to the shoes and their holding power, is about .074 at sixty miles an hour, increasing to .241 as the speed is reduced to ten miles an hour, to .273 at five miles an hour and just as the final stop is made it is .330, so you see the brake shoes really hold less at a high speed than at a low one, and more brake power can be applied at the high speed than could be safely used at a low one and make the holding power about right for each speed.

Now it follows that if the full brake power was the same for all speeds, if it was the proper power for a moderate speed it would be much too low for a high speed. If a high speed was the standard the full brake power would be too high for the low speed, the wheels would skid on the rail and a loss of about two-thirds of the brake power would result. This would allow the train to run considerable farther than if the wheels were held back by the shoes just up to the sliding point—*without sliding.*

Therefore, an attachment to the brake that would give a very high brake power when first applied while running at a very high speed and gradually reduce this brake

Digitized by Google

power at about the same rate the speed was reduced, would be proper for all speeds.

This brake power for moderate speeds has usually been fixed at 90 per cent of the weight of the coach when all the wheels have brake shoes applied to them, and is about all that can be used without sliding the wheels just as the final stop is made.

This reduction of 10 per cent from the total load on the wheels with brake shoes applied is not exactly correct for both light and heavy cars. If 10 per cent of the weight of a car weighing 50,000 pounds is a proper reduction to prevent wheel sliding, then the same number of pounds reduction, i. e., 5,000 pounds should be enough for a car weighing 100,000 pounds. The old 90 per cent rule would give 10,000 pounds as the amount for this car, or 5,000 pounds more than needed. Therefore, to get the best service the same amount of reduction in pounds should be made from all cars braked to the same per cent.

For emergency, the high speed brake will apply the brakes at first with a brake power of 125 per cent of the weight of the coach and gradually reduce the cylinder pressure as the speed is reduced, till it reaches the standard of 60 pounds, which gives a 90 per cent brake power, at which point the reduction ceases, leaving the cylinder pressure at the amount and the braking power at the percentage at which the wheels will not slide when the car is about to stop.

To get this increased brake power brake pipe and auxiliary pressure is increased to 110 pounds. With an emergency application the pressure at first is about 85 pounds. The brake cylinder pressure is reduced by an automatic reducing valve, which is here illustrated.

This reducing valve, the latest pattern of which is shown in Fig. 1, is fastened by the bracket at *x* to the coach frame (see Fig. 6) and connected to the brake cylinder by suitable piping at *z* (see Fig. 2). When the air enters the cylinder at the time brakes are applied, it

Digitized by Google

HIGH SPEED BRAKE AUTOMATIC REDUCING VALVE

FOR PASSENGER EQUIPMENT CARS AND LOCOMOTIVES.

PLATE F 45. (1898 Pattern).

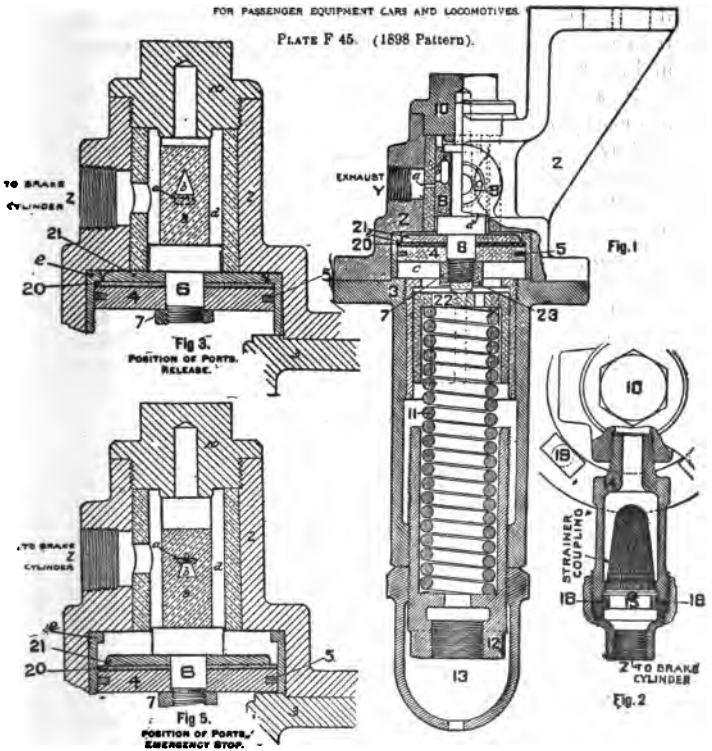

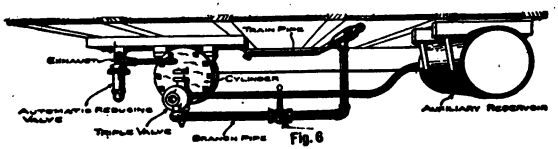

Fig. 6

Digitized by Google

also comes in on top of piston 4. This piston is held up by the spring 11 against a pressure of 60 pounds per inch, if no more than 60 pounds comes into the cylinder the reducing valve remains stationary in the position shown in Fig. 3.

It should be noted that the area of the reducing valve piston 4 that the brake cylinder air presses against is slightly less when the gasket 20 is up solid to the shoulder of the bushing *e* than after it is moved down.

When a graduated service application is made, if the brake cylinder pressure raises above 60 pounds the piston 4 is moved down far enough to open the triangular port *b* in the slide valve 8 to exhaust port *a* in the seat so that the widest part of port *b* is open as shown in Fig. 4. Air can then pass out of brake cylinder about as fast as it comes in through graduating valve of the triple; when

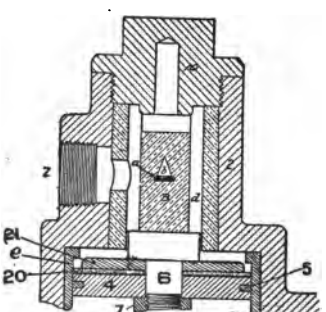

Fig 4.
POSITION OF PORTS.
SERVICE STOP
PRESSURE EXCEEDING 60 POUNDS IN BRAKE CYLINDER.

brake cylinder pressure drops below 60 pounds the spring under piston 4 moves slide valve 8 up and laps ports *a* and *b*, as shown in Fig. 3, and no more air can escape.

In case an emergency application is made the brake cylinder pressure rises like a flash up to 85 pounds, piston

Digitized by Google

4 is forced down at once against the tension of the spring to the lower limit of its travel into the position shown in Fig. 5. This pulls slide valve 8 clear down, the small end of the triangular port *b* is open to port *a*, and brake cylinder air escapes slowly to atmosphere. As pressure is reduced spring 11 has power to move piston 4 up and the triangular port *b* opens wider, which reduces the brake cylinder pressure faster, down to 60 pounds; at which point the slide valve is moved up to lap ports *a* and *b* so no more air can escape from brake cylinder; this position is shown in Fig. 3.

The size of this exhaust port *b* has been determined by experiments so as to reduce the brake cylinder pressure proportionate to the reduction in speed. It is a different size for each size of reducing valve to suit the different volumes of air which should pass out of small and large cylinders in about the same time.

With a service application the reducing valve reduces the brake cylinder pressure only, as the triple valve closes the air port from the auxiliary. With an emergency application where the brake pipe pressure drops below 60 pounds the triple holds the air port open and the reducing valve has to reduce both brake cylinder and auxiliary volumes to 60 pounds.

When the brake is first set with emergency at a high speed the pressure is about 85 pounds in the cylinder; as the speed of the train is reduced by the action of the brakes, the pressure is also reduced by the reducing valve at about the same rate, till it reaches 60 pounds, where it remains till the brake is released in the regular way.

After an emergency application the reducing valve lowers the cylinder pressure very slowly at first through the small pointed end of the port *b*, and faster as the pressure drops till it reaches 60 pounds, when the valve closes. The speed of the train is reduced by the action of the brakes slowly at first, and the reduction of speed is more marked each succeeding second of time till when

Digitized by Google

nearly at a stop the speed is reduced very fast. The pressure is reduced at about the same ratio as the speed, so as to have it reach 60 pounds at about the time when 60 pounds will do the work properly.

This gives a very high brake power ready to use if found necessary at high speeds and still leaves the service application feature unchanged, ready for use in ordinary stops. With the service application the reducing valve remains in position as shown in Fig. 3. A reduction of 20 pounds from 110 applies the brake fully, as this reduction will fill the brake cylinders at 50 pounds, the full pressure of an ordinary service application; as well as leaving a high auxiliary reservoir pressure of 90 pounds ready for two more full service applications of the brake if found necessary before re-charging; during these moderate service applications the reducing valve does not move.

The brake pipe and auxiliary pressure is set at 110 pounds with this type of brake—it may be more if the conditions seem to call for it. As the engines equipped for drawing these high speed braked trains may be used to draw coaches without the high speed attachments, some arrangement is needed for changing the standard brake pipe pressure from 110 pounds to the lower pressure and vice versa. For this purpose there are two feed valve attachments on the engine. One of them is set at 70 pounds, the other at 110, and there is a reversing cock between them which can be turned to cut-in either one for service as is desired, only one being operated at a time. This reversing cock and valves are coupled to the brake valve with suitable piping. The B-6 feed valve can be used instead of the reversing cock and two feed valves. There is a duplex governor for the air pump, one side of which is set for 90 pounds main reservoir pressure, for the ordinary 70 pounds brake pipe pressure, the other side set at the higher pressure required, and a cock to cut out the 90 pound side when using the higher pressure. Ten pounds excess has been found sufficient

Digitized by Google

with a short train, but more is needed with a longer train; in some cases 30 pounds, in order to be sure to release all brakes, after a light application. The tender is equipped with a quick-action triple and reducing valve the same as a coach. An engine truck brake is a necessary part of this equipment, which is supplied with air from the driver brake triple; a reducing valve similar to the coaches is used, set at 50 pounds. Any extra coaches placed on these high speed braked trains require a reducing valve, although a safety valve set to blow off at 60 pounds through a restricted opening can be used temporarily by screwing it into the oiling plug hole in the cylinder head. This safety valve is not as reliable as the reducing valve, and is only used as a temporary relief.

This type of brake will stop a train running at sixty miles per hour in about 450 feet, less distance than the ordinary quick-action brake with 70 pounds.

In making a graduated service application, with a pressure of 60 pounds in the brake cylinder, when a further service reduction of brake pipe pressure is made, the cylinder pressure will increase but slightly above 60 pounds and immediately be reduced to that amount unless a full continuous service reduction is made, in which case the pressure may rise to 77 or 80 pounds, being soon reduced to 60 pounds by the reducing valve. After a cylinder pressure of 60 pounds is obtained, a full service reduction to below 60 pounds should never be made, except at high speeds in an emergency.

A high speed brake train is handled in the same manner an expert engineer handles an ordinary passenger train of the same length. Remember that air at 110 pounds pressure moves through the air ports more rapidly than at 70 pounds, so when listening to the sound of the air discharging from the preliminary and brake pipe exhausts watch the gage closely. To make the brake valve reduction more gradual a larger brake valve reser-

Digitized by Google

voir is now used, which holds about 812 cubic inches. The older ones hold close to 600 cubic inches.

A 20 pound service reduction will give about the same brake cylinder pressure from 110 pounds that it does from 70, i. e., about 50 pounds.

A 22 pound service reduction will give close to 60 pounds in the cylinder, anything over that may be wasted, as the reducing valves will not let the cylinder pressure rise above 60 pounds.

With 110 pounds on the back of the slide valve at the beginning of a service application and 90 pounds at the time of a release, the slide valve cannot be moved as easily by the triple piston as when the pressures are 70 and 50 pounds, and it will take more change of pressures each side of the triple piston to move it.

Triple valves, when dirty, or when they need oiling, give more trouble with 110 pounds than with 70, on account of the increased pressure on the slide valve which makes them more apt to work quick-action with a gradual service reduction. For that reason both the triple valves and brake valve must be kept clean and well oiled and good stiff excess is needed with a long train.

When coupling to a train having 110 pounds brake pipe pressure with an engine carrying 70 and 90 pounds, put the brake valve on lap and leave it there till the 110 pounds pressure has blown down to 70 pounds and the reducing valves on the cars have blown down to 60 pounds. Then with full excess go to full release and the brakes should all release. With L triples it is necessary to carry the high pressure on the engine to release the brakes.

In handling any very long passenger train a straight air brake on the engine and tender is a valuable aid in preventing break-in-twos or serious shocks when releasing at a slow speed, the ET equipment on the locomotive is still better.

Unless an emergency arises requiring a very sudden stop, do not use the emergency application with 110

Digitized by Google

pounds, when running at a slow speed, say below twenty-five miles an hour. Unless the rail conditions are perfect the wheels are apt to slide; this will increase the length of the stop. When an emergency, such as danger to life or property, confronts you, remember that all the brakes act quickly with the emergency application—in less than three seconds—which they will not do as quickly with a service application. Difference in piston travel does not affect the work of the high speed brake as much as it does the 70 pound brake with full service applications. As soon as the reducing valve operates it equalizes the cylinder pressures for long and short travels, for all will reduce to the same final pressures. If the leverage is proper, all cars will be braking alike. One of the best preventives of wheel sliding is equal and maximum brake power on all the cars, tender and engine. With all wheels holding back alike tests show that wheel sliding is rare.

Digitized by Google

HIGH PRESSURE CONTROL

With the heavy capacity cars now in general use, the empty weight of the car on which the braking power is calculated is such a small proportion of the full loaded weight that some provision must be made to increase the braking power on the loaded cars. This is particularly the case with coal and ore cars, which usually run empty to the mines and return loaded. For this class of cars a two-pressure system has been devised in which a moderately low pressure of 55 to 65 pounds is carried in the brake pipe and auxiliaries of the empties, while with the loaded trains 90 pounds can be carried and thus increase the brake power about 50 per cent. The duplex governor and reversing cock which is part of the High Speed Brake is used with the High Pressure Control, but the duplex governor is piped a little different. There are two separate pipes leading to the governor,, one from the main reservoir to the side of the governor set for the highest pressure, the other pipe leading from the left side of the reversing cock, which is set for the lowest pressure, to the low pressure side of the governor, so that when the low pressure feed valve is cut in, the low pressure governor is also cut in.

PLATE F-48

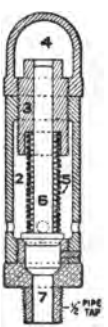

SAFETY VALVE.

When handling a train of empties going up hill the low pressure is used, coming down hill with a train of loads the high pressure is used, and thus the train can be controlled. Any empty cars in the train must have the air brake cut out at cross-over pipe when using the high pressure to avoid sliding wheels; unless the caboose has a safety valve, it must be cut out also.

A safety valve shown on this page is attached to the brake cylinders of the engine and tender. This same type of valve is also used on any extra coaches set in a High Speed Brake train.

Digitized by Google

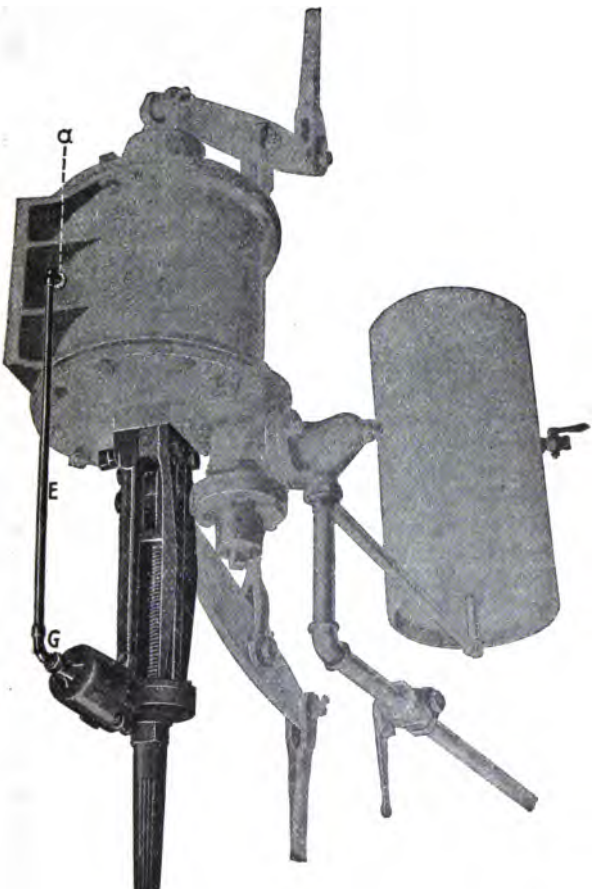

Digitized by Google

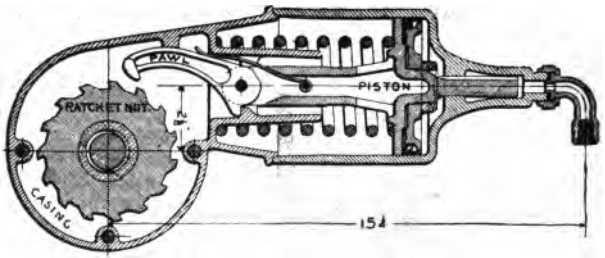

THE AMERICAN AUTOMATIC SLACK ADJUSTER

The illustrations of the American Brake Co.'s Automatic Slack Adjuster show how the adjuster cylinder and adjusting screw is attached to the brake cylinder and dead cylinder lever. A small port is drilled and tapped in the brake cylinder at the point *a*, which is to be the limit of the *running* piston travel. A pipe E is connected from this port *a* to the adjuster cylinder at G.

The brake piston acts as a valve to admit air to the adjuster cylinder. When it moves beyond port *a* during a brake application, air from behind brake piston passes out of port *a* through pipe E into the slack adjuster cylinder, pushes the piston to the left against the strength of the coiled spring, carrying the pawl out; the flat spring pushes the pawl down, hooking it down over a tooth of the ratchet nut. When the brake is released, air in the adjuster cylinder passes out, spring then returns the adjuster piston to its normal position which pulls back pawl; this rotates ratchet nut on the screw attached to the dead cylinder lever fulcrum jaw, moving the end of the lever up 1/32 of an inch, taking up some slack in the brake rigging. The slack is not taken up when the brake is applied, but after it is released, when there is no strain on the cylinder lever. When the coiled spring pushes back the piston and pulls the pawl, the lug strikes the stop, this raises the pawl out of the ratchet, so that the ratchet nut can be turned either way, if the adjuster piston is in normal position, this will allow nut to be turned by hand to let out or take up slack in brake rig-

Digitized by Google

ging when new shoes are put on, or repairs made to brake gear. In case the ratchet nut is turned on its screw till the jaw is pulled up solid against the adjuster cylinder, in the older type, the pawl cannot be moved far enough by the spring to have the lug strike the stop; in which event the casing must be opened up and the pawl raised out of the ratchet nut, so it can be turned by hand. A later type of American Adjuster has a stop screw located near the adjuster cylinder, so arranged that the jaw comes in contact with it instead of the cylinder; by removing this screw and turning the ratchet by hand the pawl is released. A still later type has a tap bolt in the end of the the adjuster nut casing, slack off this tap bolt and the screw will turn a little more and release the pawl. The pawl and ratchet are enclosed in a tight case to keep out ice and foreign matter which would prevent their movement.

In case the brake piston does not travel to port *a* the adjuster does not move any of its parts, but is at rest. If port *a* is partially or fully opened by the piston, which acts as a valve, compressed air is admitted to the adjuster cylinder, so it is operated.

Slack adjusters take up the travel beyond a certain running travel limit. The brake piston will travel farther on a running car than one standing still, because the journals and bearings will be crowded to one side of the oil boxes and all lost motion that can be taken up in the truck comes out when running. For that reason the piston travel is usually found to be less when measured at a standing test than the actual distance of the port *a* from the pressure head of the cylinder. If this port *a* is eight inches from the head to allow eight inches travel it is not unusual to find the travel at a standing test, less than six inches. When locating port *a* first see how far the edge of the piston packing leather is from pressure head *x*. Port *a* is very small where it comes through the wall of the cylinder, so that the piston packing leather will not be cut when passing over the opening.

Digitized by Google

The amount of slack depends on the brake leverage. For instance, a 10-inch brake cylinder has a power of 4,700 pounds. If it is used on a coach weighing 52,220 pounds, 90 per cent of this weight is 47,000 pounds, so the brake power required at the shoes is ten times that at the piston, or a total leverage of 10 to 1. With a car weighing 36,550 pounds the brake power would be 32,900 or a total leverage of 7 to 1. Now with the same amount of slack on the shoes of each car one car would have 10 inches piston travel, the other would have only 7 inches. With a leverage of over 10 to 1 you cannot restrict the piston travel to 6 inches and have the shoes clear the wheels so the coach will pull easy between the stations.

One of the errors made when taking up slack by hand is using shoe clearance instead of piston travel as a guide. With a light car and large cylinder, where the total leverage is low, there will be considerable clearance in proportion to the piston travel. If the slack is taken up the same as for a car of heavy leverage, the brake piston will not pass over the leakage groove with moderate service applications. On the other hand, with a heavy car, the piston may bottom on the cylinder head. For this reason a device that will regulate the piston travel while the train is under way will do better work than hand regulation.

Uniform piston travel is one of the prerequisites of good brake service. When this can be automatically maintained during an entire trip it ensures a uniform as well as a maximum efficiency of the brakes. If this adjustment is made by hand the piston travel varies considerable on a long trip with a corresponding loss of efficiency.

Unequal piston travel is the cause of a good many slid flat wheels in coach equipment, and is responsible for most of the break-in-twos in long freight trains. The braking power is increased by short travel and reduced by long travel, so that a coach with short travel may have power enough to slide the wheels when the other cars do not skid.

Digitized by Google

Example

Say that an 8 wheel coach weighs 48888 lbs.
Take 90 per cent for brake power 90
In round numbers this will be 44000
On each brake beam. 11000 lbs.

Total Length of Live Levers 36 inches
Length of Short end 8
Proportion 4½ to 1

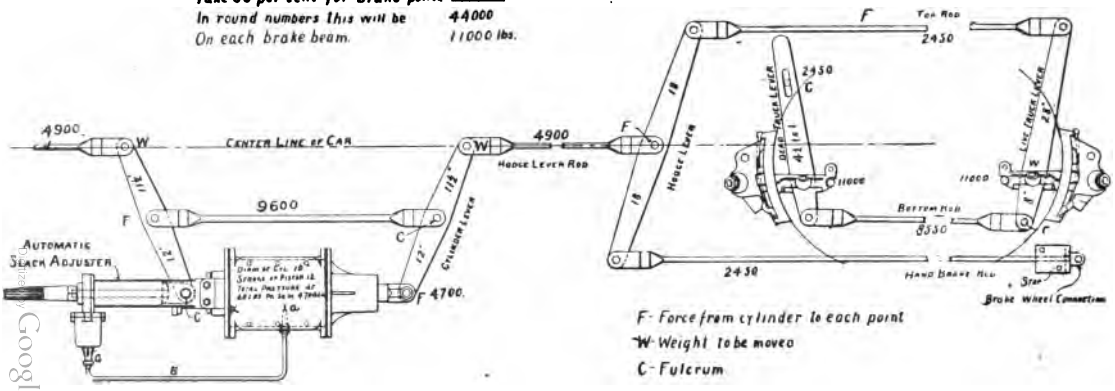

F- Force from cylinder to each point
W- Weight to be moved
C- Fulcrum

Digitized by Google

BRAKE LEVERAGE

Ability to figure up brake leverage is an accomplishment for an air brake operator—not always a necessity—it pays to know something definite about it. The rules are not complicated and formulas help to shorten the calculations. You should first learn how the several classes of levers operate and the difference between those of the first, second and third kind. A lever of the first kind has the power applied at one end, the weight to be moved is at the other end and the fulcrum which takes both the strain of the power and the resistance of the weight is in between the ends; in the cut of a lever of the first kind F is the force or power coming from the top rod, C in the middle is the fulcrum and W at the bottom is the brake beam or weight to be moved. The cylinder lever connected to the brake piston is of the first kind. A pinch bar when we pry down on the rail and against the tire of a driving wheel is a good illustration of this class of lever.

A lever of the second kind has the power F applied at one end, the fulcrum C is at the other and the weight or brake beam to be moved is between them at W; the live lever of an outside hung brake is usually of the second kind. If you use the pinch bar by passing it under the object to be moved, resting one end on the ground and lifting up on the other it will show you the second kind.

With a lever of the second kind the weight W takes as much strain as both the power F and fulcrum C. A lever of the third kind has the power F attached between the ends W and C; a lever of this class takes more power in proportion to the weight to be moved than either of the other kinds. With any class of lever the strains at the ends added together equal the strain in the middle. So you see the power developed by any one of three kinds of levers of the same length depends on the relative positions of the power, weight and fulcrum.

When you make measurements and calculations of

Digitized by Google

brake power, in case the pins or brake jaws are much worn set the brake by hand and measure the levers carefully as a mistake of a very short distance on the short end of a live lever will alter the power considerable. Always multiply the power or force in pounds by the distance in inches from the point F where power is attached to the fulcrum C, and divide this product by the distance in inches from fulcrum C to brake beam W.

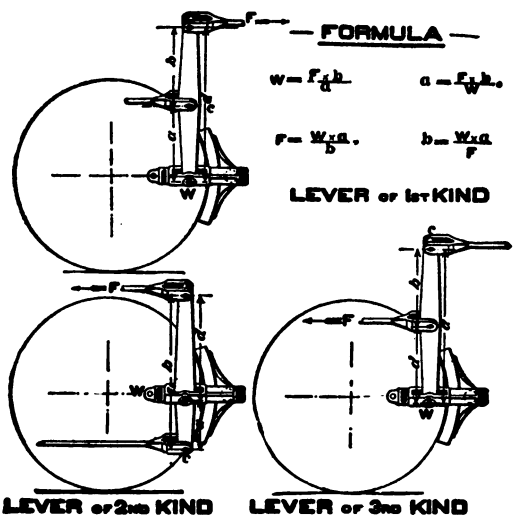

On page 177 is a small cut of the arrangement of levers for a coach brake with Hodge system which we will use to illustrate this explanation.

Beginning at the brake cylinder where the power is first exerted, the pressure at F where the piston is attached to live cylinder lever is 4,700 pounds for a 10-inch cylinder with quick-action triple. This lever being of the first kind with fulcrum C between the ends, we multiply the power 4,700 by 12, the distance to the fulcrum C, and

Digitized by Google

divide this product by 11½, the distance from the fulcrum to W, the Hodge lever rod connection, and have 4,900 pounds strain on this rod which goes to the Hodge lever at X. This is a lever of the third class and being equally divided, each end gets half this power or 2,450 pounds, which is the force at the top end of the live truck lever. We next multiply 2,450 by the distance on this lever from F to C, 36 inches, and divide this product by 8, the distance from C to W, and we have 11,000 pounds, the strain on the brake beam. A shorter way is to multiply the pull at top end of live lever 2,450 pounds, by 4½, the proportion of the live lever. To get the proportions of a live lever, divide the total length between the centers of outside pin holes at F and C by the distance from C to W—called the short end—in this case 8 into 36 or 4½ to 1. If the force at F is 2,450 pounds and the strain at W is 11,000 pounds, the resistance at C will be 8,550 pounds, as the sum of the strains at both ends of a lever must balance the strain in the middle. This strain of 8,550 pounds on the bottom rod goes to the bottom end of the dead truck lever at F and is to be multiplied by the distance from F to C—the outside length of dead lever—and the product divided by the distance from C at the top end of dead lever to W the brake beam connection; if the dead lever is the same proportion as the live one the result will be 11,000 pounds.

Now going back to the cylinder levers, the tie rod has a strain of 9,600 pounds which is the sum of 4,700 and 4,900, the strains on both ends of the live cylinder lever. This strain goes to the point F in the floating cylinder lever which is shown fulcrumed at C on the cylinder head and its free end W connected to the Hodge rod for the floating lever at the other end of the car and from there the power goes to the live and dead truck levers of the other truck as already explained.

By this arrangement of levers we get a braking power on each end of the car equal on both trucks, with a total amounting to twice what the brake piston has; but we get

Digitized by Google

it because the piston travels twice as far as it would if the fulcrum C in the live cylinder lever was fixed stationary; both cylinder levers move and the piston travels far enough for the two.

Both cylinder levers need not be of the same length, but they must be of the same proportion if the same strain is to go to each end of the car. Coaches have cylinder levers exactly alike for each end of the coach; freight cars do not, although they are the same proportion.

In making calculations for braking power for coach equipment, take 90 per cent of the weight which the wheels having brake shoes attached put on the rail under them. With all wheels braked this means 90 per cent of the weight of the coach when empty, a twelve wheel coach with only eight wheels braked takes 8/12 of the weight as a basis for calculation. Use 70 per cent of the light weight of any freight car used in interchange service; while 100 per cent of the light weight of a tender is generally used, a tender usually has a supply of water, fuel and tools which hold its weight up above the skidding point. The light weight of cars and coaches is used when making leverage calculations to keep the brake power below the limit at which the wheels will slide when the brake is operated on an empty car. If the brake cylinder receives its supply of air from the auxiliary *only*, as is the case with the plain triple valve and some of makes of quick-action triples, use 50 pounds as the equalized piston and auxiliary pressure. If part of the supply comes from the brake pipe, as is the case with the Westinghouse quick-action triple, use 60 pounds.

Driver brake leverage is 75 per cent of the weight at the rail; an engine truck brake should have less than that, as there is no way to get sand to the rails for the truck wheels on slippery track.

Digitized by Google

CAM DRIVER BRAKE LEVERAGE

The limited space in this book will not allow a full description of how the cams and levers are designed, but some information on calculating their brake power will come handy to the men operating them. The illustration of the cam brake shows its various parts.

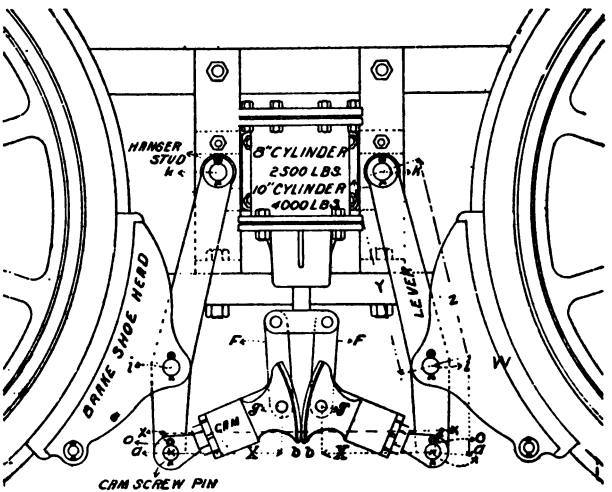

FORMULA.

$$W=\frac{F\times X\times Z}{O\times Y} \qquad O=\frac{F\times X\times Z}{W\times Y} \qquad X=\frac{W\times Y\times O}{F\times Z}$$

These cams are really segments of wheels with x-x for the centers. If they are properly laid out no matter how far they roll down, the point of contact at the edges of the wheels will always be on the line between the centers x-x.

The cam as used with the brake is a bell crank with the long arm from g to x and the short arm from x to a. A true bell crank requires a fixed fulcrum at x to act as a brace to transmit the power at g to a, but in the case of the cams no fulcrum is needed there, for the faces of the cams rolling against each other act as fulcrums.

Digitized by Google

To calculate the brake power, set the brake full on and measure the distance between the cam link pins at *a-a*. Also measure the distance between the cam link pins *g-g* and subtract this distance from the distance *a-a;* one-half of this remainder will be the long arm of the bell crank included in the design of each cam, which distance we will call X in the formula. We do not measure clear to the face of the cam, because the power is applied at *g-g,* one-half of the power exerted by the piston going to each cam.

As the cams roll down against each other when the brake is set their faces touch at one point only, which we will call the point of "rolling contact." Place a straight edge from one of the cam screw pins at *a* to the other, on a line with their centers and measure from the straight edge up to the point of rolling contact; this distance is the other arm of the bell crank, it is called the "offset," and is the distance from *a* to *x* also; this is named O in the formula. This last distance divided into the length of the line from *b* to *a*—the long arm of the bell crank—gives the leverage of the cam.

Multiply this leverage by 1,250 for an 8-inch cylinder or by 2,000 for a 10-inch cylinder, which will give the power delivered at the bottom end of the lever at *a*. Multiply this power by the whole length of the lever from *a* to *k,* called Z in the formula, and divide the product by the distance from the pin *k* to the pin *i* the brake shoe head, which is distance Y; this quotient is the brake power delivered at that shoe; four times the power for one shoe will be the brake power for all shoes, which should be 75 per cent of the weight on drivers. In all these calculations we use 50 pounds as the air pressure per inch on the brake piston.

To calculate the other way, take 75 per cent of the weight on the rail at the drivers, one-fourth of that will be the power required at each shoe. Multiply this amount by the length in inches of the lever from *i* to *k* and divide

Digitized by Google

the product by the length from *k* to *a;* this last amount will be the power required at *a,* delivered by the cam.

Divide this by 1,250 for an 8-inch cylinder or by 2,000 for a 10-inch cylinder, the quotient will be the "leverage" of the cam, and should correspond exactly with the cam in use. To get the leverage of the cam, divide the length at X by the offset.

The cams are designed to give the full brake power of 75 per cent of the weight on drivers when the shoes and tire are worn down to their limit. The brake power increases as the length of the cam X is increased by wear of shoes and tires, but this does not affect the "offset" O. Therefore, with thick new tire and new shoes you will not get the full brake power, because the long lever of the bell crank in the cam is not the full length as laid out for a thin tire. To avoid the difficulty of having too much leverage with thin tire the radius of the face of the cam is struck from a point one and one-fourth inches further out than at *x*. A thick or thin shoe does not change the power as much where the cams are long with long wheel base as with very short cams.

If you find that with a short piston travel, say two inches, the cams do not roll down so that their faces separate at the lower corners, as shown in the illustration, the cam links are too short. It is not unusual to find these links put up too short, and this defect reduces the brake power very materially. Changing the brake heads and putting on a wide one in the place of a narrow head also reduces the brake power, as it shortens the length of the cam. A thick shoe reduces the power the same way.

In any brake the proportion between the piston travel and the brake shoe travel is the leverage. For instance, if the piston travel is four inches and the brake shoes travel one-half inch, the proportion is eight to one, so the power from the piston is multiplied eight times. If you can get the exact brake shoe travel of a brake and divide it into the piston travel you can easily find the brake power.

Digitized by Google

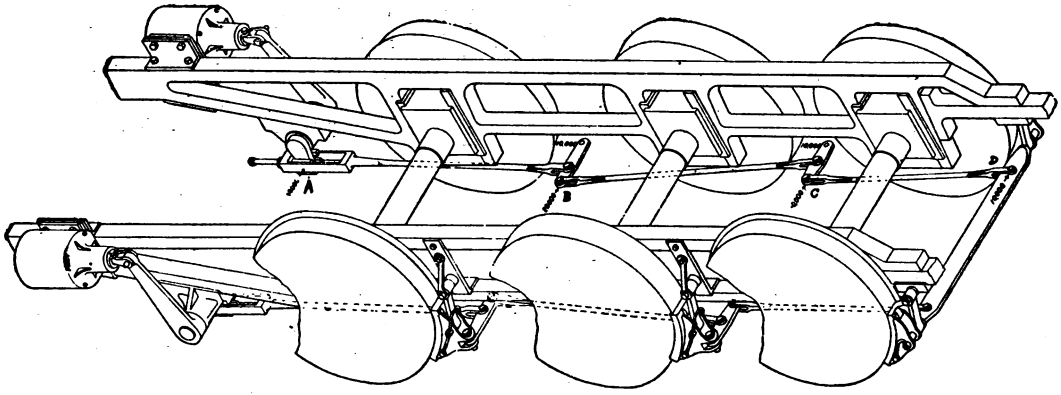

The above cut shows a perspective view of outside equalized pressure brake as applied to a six-wheeled coupled engine, showing system of levers and distribution of power.

The power shown at bottom end of cylinder lever A is 30,000 pounds. This all goes to the lever at B which is so divided that 10,000 pounds goes to the brake shoe, and 20,000 pounds to the lever at C. This lever is evenly divided, 10,000 pounds goes to the shoe there and 10,000 pounds to the brake beam connection at D, which equalizes the braking force on all shoes.

CALCULATIONS FOR AIR PRESSURES

To calculate at what final pressure two separate volumes of air at different pressures will equalize when connected so air will flow from the higher to the lower pressure, it is necessary to reduce the volumes and pressures to one standard of comparison.

Suppose that a reservoir has a volume of 1,620 cubic inches with a gage pressure of 70 pounds per inch. If that same air was expanded to one pound gage pressure per inch it would occupy seventy times as much space or 70x1,620, which is 113,400 cubic inches at one pound pressure. We will call this amount cubic-inch-pounds, all volumes and pressures can be reduced to this standard.

A gage shows the pressure above the atmospheric line, but absolute pressure begins at the vacuum line; to get absolute pressure we add fifteen pounds to the pressure shown on the gage, before the calculations are made and subtract fifteen pounds from the result to get back to the gage pressure again. If the calculations refer to volumes which contain air at or above the atmospheric pressure, this fifteen pounds need not be taken into account. If any question of piston travel is connected with it, the fifteen pounds must be considered.

We will take the case of a main reservoir of 16,000 cubic inches at 90 pounds, and an empty brake pipe of twenty-five cars which have the same volume. Multiply main reservoir volume by its pressure and divide the product by the combined volume of both reservoir and brake pipe. 16,000x90=1,440,000 cubic-inch-pounds, this divided by 32,000 gives 45, the gage pressure at equalization.

Suppose this brake pipe instead of being empty has 40 pounds gage pressure in it, and the main reservoir 90; 40 pounds in the brake pipe will be 640,000 cubic-inch-pounds, this added to the amount in the reservoir and the sum divided by the combined volumes will give sixty-five as the pressure at equalization.

Digitized by Google

A retaining valve is holding 15 pounds in the brake cylinder. After charging the auxiliary to 70 another full application is made, we can figure the equalizing pressure as follows: 450 cubic inches at 15 pounds is 6,750 cubic-inch-pounds. The auxiliary at 70 holds 113,400 cubic-inch-pounds, the total amount in both is 120,150 cubic-inch-pounds, which now expands into the total volume of 1,620 plus 450 or 2,070 cubic inches. Divide the full amount of air by the total space and we have 58 pounds. We do not figure from the vacuum line in this case.

When calculating the pressure at which the brake cylinder and auxiliary will equalize when the piston moves out, remember that there is no atmospheric air in the space left by the piston in moving out and this space must be filled with air from the vacuum line of absolute pressure, so we must add 15 pounds to the gage pressure of 70 pounds, which gives 85 pounds.

The auxiliary holds about 1,620 cubic inches at 85 pounds, this is 137,700 cubic-inch-pounds absolute pressure. The volume of an 8-inch brake cylinder with 8 inches travel, including clearance and piping from the triple, is close to 450 cubic inches; the combined volume is 2,070 cubic inches. Divide 137,700 by this combined volume and subtract fifteen from the quotient, you will then have the equalizing pressure, about 51.5 pounds.

To find how much brake cylinder air at 60 pounds comes from the brake pipe with an emergency application and how much from the auxiliary, proceed as follows: The brake cylinder volume of 450 cubic inches at 75 pounds absolute pressure is 33,750 cubic-inch-pounds. The auxiliary of 1,620 cubic inches loses 10 pounds, from 70 down to 60; this is 16,200 cubic-inch-pounds from the auxiliary; this subtracted from 33,750 leaves 17,550 cubic pounds to come from the brake pipe. Divide 17,550 by the volume 450 cubic inches we have 39 pounds absolute pressure; subtracting 15 pounds to get gage pressure we have 24 pounds as the part the brake pipe supplies; this varies

Digitized by Google

with the piston travel and condition of strainers, it is usually less than this.

When you make a *partial* application of the brake and want to know what brake cylinder pressure will result from any certain reduction in the auxiliary, proceed as follows: Say we make a 10 pound reduction. If the volume of the auxiliary is 1,620 cubic inches, at 10 pounds per inch the total amount passing from the auxiliary to the brake cylinder would be 16,200 cubic-inch-pounds. In this calculation we will allow for the air contained in the clearance space of the cylinder, the auxiliary tube between the triple valve and cylinder, and the triple valve itself, which amounts to an average of 47.92 cubic inches, which contains air at 15 pounds per inch or close to 718 cubic-inch-pounds. This added to the amount coming in from the auxiliary makes 16,918 cubic-inch-pounds, and it will equalize in the 450 cubic inches total volume of the brake cylinder and clearance at 38 pounds absolute pressure, or 23 pounds gage pressure. You can calculate for any given reduction the same way from any pressure; just as long as you do not make a brake pipe reduction that will cause the brake cylinder and auxiliary to equalize, or when you do that it stops the auxiliary reduction. A 10 pound reduction from 90 gives just the same pressure as at any lower pressure till you reach the equalizing pressure, which is usually below 50. The next 10 pound reduction from the auxiliary into this cylinder of air having a pressure of 23 pounds will show a greater proportionate raise on the gage, for the first reduction had to fill the cylinder from the vacuum line up to gage pressure—15 pounds—the second one had this work done for it, and therefore made a better showing on the gage.

When making tests the gage will not always show these exact amounts, as the leakage groove uses considerable air, auxiliaries are not all the size specified, the clearance in the end of cylinder varies, and the expansion of air lowers the temperature, which alters the pressure.

The question of the fall of temperature is not taken

Digitized by Google

into consideration in these calculations, as the temperature of the air in the brake equipment on a car is very close to that of the atmosphere at all times.

To get the area of the piston, multiply the diameter by itself and that product by .7854. To get the volume of the cylinder, multiply this area by the piston travel and add the clearance. This clearance consists of the space between piston and pressure head, usually ⅝ of an inch, the pipe between the triple and the cylinder and the space in the triple valve that is filled with brake cylinder air.

Reservoirs are so constructed that it is difficult to calculate their exact volume from their outside dimensions, this can be obtained exactly by weighing them while empty, then filling full of water and weighing again; the difference in weight will be the amount of water contained. A pound of water at 62 degrees occupies 27.71 cubic inches; one cubic foot weighs 62.355 pounds.

A cast iron auxiliary for an 8-inch freight brake holds about 1,620 cubic inches.

10 x 24 in. wrought iron auxiliary 1.510 cubic in.
12 x 33 in. wrought iron auxiliary 3.030 cubic in.
14 x 33 in. wrought iron auxiliary 4.120 cubic in.
16 x 33 in. wrought iron auxiliary 5.322 cubic in.

The equalizing reservoir from 590 to 621 cu. in. the later pattern 10 x 14½ inches long, hold 800 cu. in. A freight car has about 640 cu. in. in the brake pipe, hose, cross-over pipe and triple valve to the bottom of the triple piston—all this space contains brake pipe air.

Main reservoirs vary in size to suit their location on the engine, when of sufficient volume there are usually more than one, having the air from the pump passing into the first one, from there to the next, and so on to the brake valve. This gives the air a chance to cool down to the normal temperature of the atmosphere, when it will deposit all its moisture as water in the main reservoir. If the air passes through the brake valve without cooling down it will leave some of the water in the brake pipe—

Digitized by Google

see question 8—and give trouble in the operation of the brake.

Main reservoirs should have a volume of at least 20,000 cubic inches. Freight engines should have 1,000 cubic inches capacity for each car in the train. An engine that can handle a 75-car train should have 75,000 cubic inches. Large main reservoir capacity is necessary to promptly release all brakes on a long train and will in a measure prevent stuck brakes and slid flat wheels on the rear cars—see question 9. A large main reservoir also tends to save a pump, as it can run at a slower speed, for it can run continuously, not intermittently.

When air at a temperature of 60 degrees is compressed from the atmosphere line up to a gage pressure of 70 pounds the temperature rises to about 400 degrees; with a pressure of 90 pounds it is about 450 degrees, at 105 pounds it is 490 degrees. As this heat is the result of the mechanical energy of the steam developed through the air pump, you can readily see that it takes more power from the boiler to reach a high pressure than a moderate one. Also the air piston will come nearer the end of its stroke before the air is compressed to 105 than at 90 pounds, so that a less amount of 105-pound air is delivered than of 90. As the air usually cools off to the normal temperature before it passes into the brake cylinder, we can take no advantage of any expansion of air by the heat of compression.

The heat that is given out by compression is taken up when the air is allowed to expand. When air expands through any opening from a high to a low pressure it takes up or absorbs heat from all surrounding bodies, this accounts for its being so cool when coming out of the bleed cock, exhaust port of a triple or exhaust pipe of an engine run by compressed air, in some cases it will form ice.

When studying the equalizing processes in the operation of compressed air equipment, remember that it is *air* that flows from one part of the equipment to another and

Digitized by Google

not pressure. Pressure is a condition, air is a substance or material. When air flows from the auxiliary to the cylinder it will change the conditions or pressure in these places, but the pressure does not flow either way.

It will take away much of the mystery of equalization if you bear these facts in mind.

THE NEW YORK AIR BRAKE

The important parts of the New York Air Brake that differ from those of the Westinghouse Automatic Brake, are the Duplex Air Pump; Governor; Engineer's Valves; Compensating Valve; Quick-Action Triple Valve; Air Signal Valve and Brake Pipe Strainer. The Brake Cylinders and pistons in all their details; Reservoirs, both main and auxiliary; Pressure Retaining Valves; Reducing Valve for the air signal system; Brake Pipe with Hose Couplings, Angle and Cut-out Cocks and Conductor's Valves are the same in both systems of equipment; their construction and operation have already been described in this book.

As freight cars in interchange service are moved from one railroad to another when of the same gage, there will be in all freight trains some cars equipped with the Westinghouse and others with the New York brake. The Master Car Builders' specifications require that all brakes in a train shall be so constructed that the different kinds will operate in unison, so as to control the speed of the train without shocks. For that reason the general rules for the handling of trains are the same, whichever brake is used. There are several differences in the construction of these two kinds of brake equipment, that give different results when they are operated; these points will be explained later on.

Digitized by Google

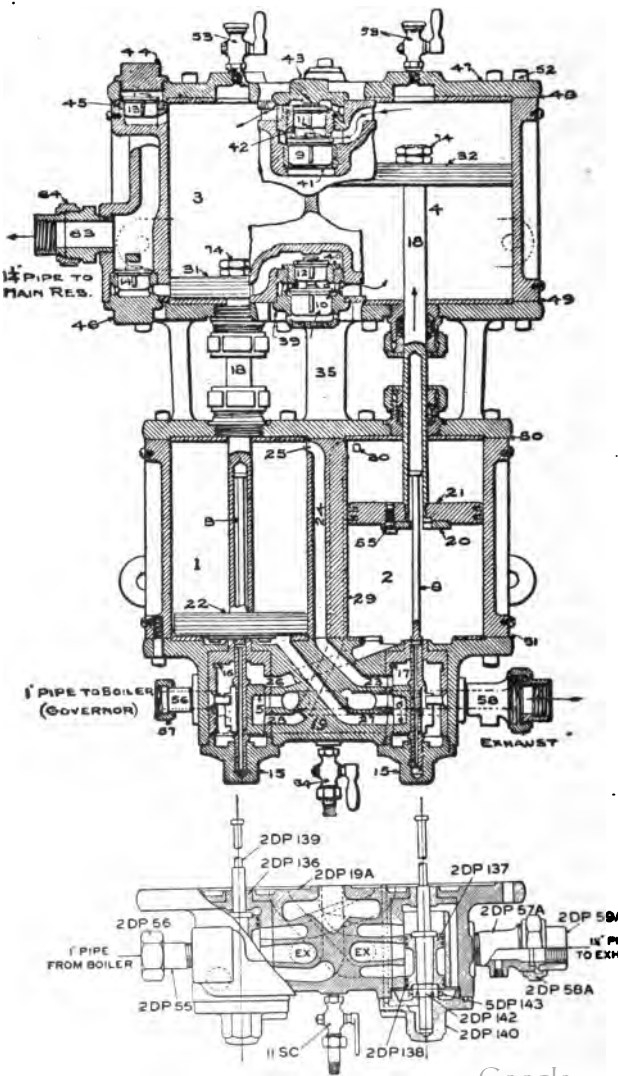

Digitized by Google

THE DUPLEX AIR PUMP

This pump has two steam cylinders, 1 and 2, and two air cylinders, 3 and 4; the steam valves, 5 and 6, being operated by reversing or tappet rods, 8-8. These tappet rods are operated by the tappet plates 20, which are securely fastened to the lower side of each steam piston by bolts 55. The steam cylinders each receive steam from the boiler and exhaust to the atmosphere, the air cylinders each receive free air from the atmosphere; but the air in cylinder 4 when compressed passes into cylinder 3 and from there is forced into the main reservoir. Thus, the air cylinders compound the air, while the steam cylinders work simple. Each steam cylinder of the No. 2 pump is 7 inches in diameter and 9 inches stroke, the low pressure air cylinder 4 is 10 inches in diameter, the high pressure air cylinder 3 is 7 inches in diameter; both cylinders have the same stroke as the steam cylinders, 9 inches. The volume of air cylinder 4 is twice that of cylinder 3.

The sectional view shows the pump with all parts in the position when making its first stroke after turning on steam, steam piston 21 and air piston 32 which are connected by piston rod 18, having made a little over half their up stroke. At the bottom is shown the new style of main steam valve, a piston valve instead of a slide valve.

Live steam comes from the boiler through the steam pipe and governor and into steam head 19 and passes into each steam chest around steam valves 5 and 6. This steam passage is shown by dotted lines from 56 on each side of number 19. A drain cock, 54, is tapped into this passage to allow condensed water to be blown out when first starting up the pump, at all other times while the pump is running it should be closed. The exhaust passage is shown leading from exhaust cavities of the slide valves 5 and 6 through 58. Under 58 comes the drain cock for the exhaust; unless the pump sets high enough so all condensed water will drain to the smoke arch end, this cock can be left open if so desired, providing there is a drip

Digitized by Google

pipe leading to the ash pan. The steam head is made with right and left side connections for live and exhaust steam, the openings not used are closed with threaded plugs.

When steam is shut off from the pump, there being no pressure on the back of the valves 5 and 6, they drop to their lowest position as shown. Live steam when first turned on passes up through port 23-24 into cylinder 1, and if piston 22 is not already at the bottom of its cylinder 1, it is forced down and held there. At the same time live steam passes through port 26 under piston 21, forcing it and air piston 32 upwards; air in cylinder 4 above piston 32 raises valve 11 and passes into upper end of high pressure air cylinder 3 above piston 31. At the same time while piston 32 is moving up, free air from outside raises inlet valve 10, passing into lower end of low-pressure cylinder 4 and filling it ready for compression on down stroke of its piston. Piston 21 then remains at top of its stroke till the other steam piston makes an up stroke.

When steam piston 21 approaches the top limit of its stroke, tappet plate 20 catches the button on the top end of the reversing or tappet rod 8, drawing this rod and slide valve 6 up so that port 27 is uncovered to the live steam and port 23-24-25 is connected to the exhaust. With live steam passing under it and the upper side connected to the exhaust, piston 22 moves upward, carrying air piston 31 with it and forcing the air in upper end of the high-pressure cylinder past the final discharge valve 13 into the main reservoir. At the same time, air from the atmosphere flows in past valves 10 and 12, filling the lower end of the high-pressure cylinder 3 with free air. The low-pressure air cylinder has one inlet valve for each end, 9 and 10; the high-pressure air cylinder has to draw its supply of free air through two inlet valves at each end, 9 and 11 at the top end and 10 and 12 at the bottom. Valves 11 and 12 are the discharge valves for the low-pressure cylinder; 13 and 14 are the *final* discharge valves from the high-pressure cylinder to the main reservoir.

Digitized by Google

As piston 22 nears the end of its up stroke, the tappet plate moves rod 8 up, drawing valve 5 upwards, this connects port 26 with the exhaust so that the steam in cylinder 2 under piston 21 will pass out; port 28-29-30 is opened and live steam passes in above piston 21, forcing it down, bringing air piston 32 with it and compressing the air in the lower end of cylinder 4 past valve 12 into the lower end of high-pressure cylinder 3, and drawing a supply of free air past valve 9 into the upper end of cylinder 4. During this downward movement of piston 21, piston 22 is stationary at the top of its stroke. As piston 21 nears the bottom limit of its stroke, tappet plate 20 strikes the shoulder on rod 8, moving it and steam valve 6 to their lower position; this opens port 23-24 to live steam and 27 to the exhaust; steam piston 22 then is forced down, bringing air piston 31 with it; the air in the lower end of cylinder 3 is forced past final discharge valve 14 to the main reservoir, free air from the atmosphere passes by valves 9 and 11 and fills the upper end of cylinder 3. This completes a round trip of both steam and air pistons.

By means of the tappet rod each steam piston moves the steam valve that opens and closes the steam and exhaust ports for the other cylinder, so that when one steam piston completes its stroke it has moved the steam valve to operate the other steam piston and then remains at the end of its stroke while the other piston makes one. This ensures that the air pistons make a full stroke and leave no clearance space at the ends of the air cylinders, except the volume of the passages to the discharge valves and leaves the air pistons in the proper position so the air from the low-pressure cylinder can pass into the high-pressure cylinder ready for the final compression to the main reservoir. All the air valves have a lift of 1/16 of an inch. Oil cups 54 are in the top heads of each air cylinder.

The No. 6 Duplex Pump here shown has the steam end constructed in much the same manner as the No. 2

Digitized by Google

NO. 6 DUPLEX AIR PUMP.

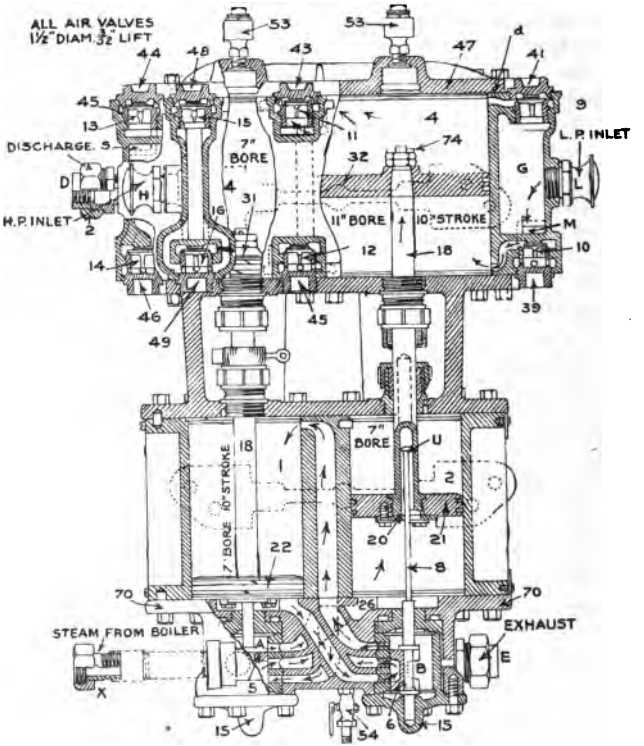

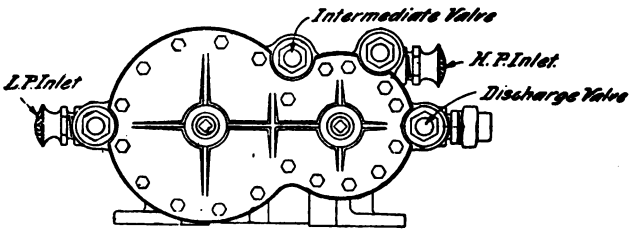

Digitized by Google

Duplex Pump. The air inlet and discharge valves are placed in another manner, the No. 6 pump has a separate air inlet for each cylinder to take in atmospheric air, their location is shown in the cuts of the top end of the pump and the sectional view. The bore and stroke of each cylinder is shown in the cuts as well as the course of the steam and air by the arrows, during the first up stroke. A description of the No. 6 is not necessary here, as with the description of the No. 2 pump and the illustrations, the operation of the pump can be readily understood. The low-pressure cylinder takes in air from the atmosphere at each stroke of its piston 32 and delivers the compressed air to the high-pressure cylinder through the intermediate valves 11 and 12. At each stroke of the high-pressure piston 31 it takes in a supply of air from the atmosphere through its inlet valves 15 or 16 and afterwards receives the air from the low-pressure cylinder in addition to the free air taken in. The defects of this pump are treated in the same manner as those of the No. 2. Leaks at the inlet valves are more easily located with the No. 6 than the No. 2, as there is a separate strainer for each inlet with the No. 6.

DEFECTS OF THE DUPLEX PUMP

When the Duplex pump stops, first open drain cock 54, if steam blows out strong the governor is all right. If very little steam passes out, examine the governor. If the button breaks off tappet rod 8, or tappet plate 20 gets worn badly or very loose, the steam piston on that side will make its up stroke, but the slide valve will not be raised up to open and close the steam and exhaust ports for the other cylinder. If the tappet rod is broken on the high-pressure side, both air pistons will stop at the top of their stroke; if the tappet rod is disabled on the low-pressure side, piston 21 can move to the top of its stroke, but valve 6 will not be moved up, steam will hold piston

Digitized by Google

22 and air piston 31 at the bottom of their strokes. Taking off cap nuts 15 will soon locate which tappet rod is at fault. To locate at which end of the stroke the air piston has stopped, remove the oil cups from the top of air cylinders and run a piece of wire down to the piston. If the nuts 74 work loose and strike the top head so the piston can not make a full stroke, the steam valve on that side will not be moved to change the course of steam to the other cylinder, and the other piston will not move. This defect acts like a button broken off; it can be located by taking top head 47 off.

Worn air piston packing rings will allow the pump to run very fast and not make much air; it will run hotter than usual and pound badly. The air cushion necessary to keep the air pistons from striking the heads will be lost; this will cause the pound. Leakage of air around the high-pressure piston rod will waste the air already compressed, and allow the piston to strike the lower head; it will also make the strokes uneven. To locate worn air piston packing rings, run the pump very slowly against full pressure in the main reservoir. If the rings leak considerable, compressed air will get past the piston in the latter part of its stroke; this will reduce to nothing the amount of free air drawn in at the inlet valves. To locate the defective piston, note which one in making its stroke is not drawing in air properly. This is not a very good test for the high-pressure piston, as it may be drawing part of its supply from the low-pressure cylinder, which has been expanded by the heat of the cylinder. If the pump works all right at a low air pressure, and as the pressure increases the low-pressure cylinder seems to be doing most of the work, examine the high-pressure side to see why it is not doing its share. The low-pressure piston ordinarily works against a pressure of three atmospheres—30 pounds gage pressure, which is the pressure on the high-pressure piston at the beginning of its stroke when both cylinders have filled full of free air from the atmosphere.

Digitized by Google

If an inlet or receiving valve 9 or 10 leaks, the air will blow out past it as piston 32 moves towards it. Both valves 9-11 or 10-12 will have to leak if any air gets back to the atmosphere from the high-pressure cylinder. Open the oil cup on the low-pressure cylinder, run the pump slowly against the full reservoir pressure; if valve 11 leaks when the high-pressure piston is moving up air will pass valve 11 and blow out of the oil cup. If final discharge valve 13 leaks, stop the pump, opening the oil cup on the high-pressure cylinder will show it. If valve 14 leaks, the piston, if not at the top of cylinder 3, will move up there unless the air can blow out around the piston rod. Leaky air inlet valves will cause the pump to make irregular strokes, quick towards the leaky valve and slow away from them. If *discharge* valves leak, the piston will move slowly towards the leaky valve and quickly away from it. A leak by the gasket 48 will show like a leaky air valve; to be sure which it is, the best way is to take up head 47 and examine the gasket and air valves. When the air valves or their seats have worn so as to materially increase the lift or allow them to leak, it is best to put in new valves and seats that are in perfect order. When new valves are placed in the old seats or the old valves ground in to a fit, be careful that the lower end of the wings of the valve does not strike on the cages or the stops of the valves under them.

The exhausts from the pump when run very slowly against standard pressure, will usually show where the air leaks are located.

Leaky steam piston packing rings will cause an intermittent blow. Run the pump slowly against full air pressure, open the drain cock in the exhaust at 58; you can soon locate the defect. A leaky steam valve will usually give a steady blow.

Steam escaping at the piston rod packing is liable to be drawn in at the air inlet valves, and fill the equipment with water; this is very dangerous in cold weather.

Digitized by Google

THE PUMP GOVERNOR

The New York Air Brake Co. make three styles of governors: the Single, Duplex and Triplex. As these only vary in the number of air diaphram bodies attached to a single steam valve body, we will describe the Duplex governor, which is the one most generally used. Air enters the governor at *e* from the brake pipe to one diaphram body and from the main reservoir to the other diaphram body. At *f* is a strainer to prevent dirt or grit

Duplex Governor.

PLATE Q 4.

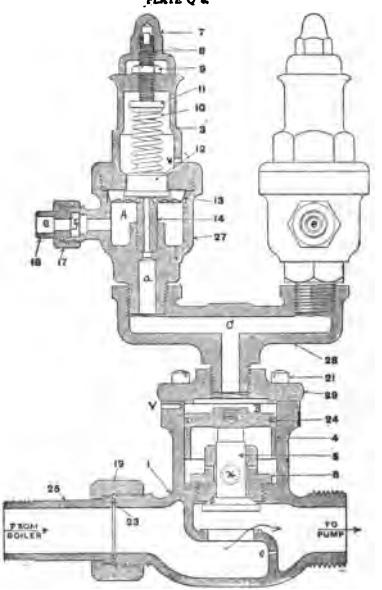

passing from *e* into chamber A. Air passes into the chamber A under the corrugated diaphram 13, which is held down on its seat 14 by a regulating spring 10, acting on the diaphram button 12. When the air pressure under

Digitized by Google

the diaphram exceeds the resistance of the spring 10, the diaphram is raised off its seat on 14, this allows air at the brake pipe pressure to pass down through *a* and C into B on top of piston 4, which at once moves down, also moving steam valve 5 down against its seat and shutting off the supply of steam from the boiler to the pump. A small hole at *o* lets a little steam pass through to the pump so it will make a stroke at intervals. A vent port *V* in the cylinder 1 over piston 4 allows air to blow out steadily while the air pressure is operating the governor, this also tends to keep the pump moving. When the air pressure drops so that spring 10 can hold diaphram 13 on its seat, the air escapes from chamber B over piston 4 through vent *V*; valve 5 and piston 4 are raised by the steam pressure and the steam again passes to the pump. When valve 5 is at the top of its travel a steam tight seat is at *S*, so no steam can work up under the piston 4. The dotted lines at *x* show the location of the drip opening in the side of the cylinder 1, which allows any steam that works up past valve 5 or air that comes down by packing ring 24 to escape to the atmosphere. When valve 5 is partly open, steam can blow out at the drip steadily as its stem does not make a steam tight fit in the guide 6. The regulating springs over the air diaphrams are adjusted by the small adjusting screw 8 and fastened by the jam nut 9.

The later pattern of governors have a large adjusting nut, it is shown in the Duplex Controller.

The single governor is usually set at 70 pounds, as it controls the brake pipe pressure and is piped to passage E in the brake valve on the brake pipe side of the excess pressure valve 97.

The Duplex governor has the low-pressure air diaphram chamber connected to the brake pipe or chamber A of the brake valve, the opening into E of the brake valve must be plugged, and main reservoir air to the high-pressure side. The brake pipe side is set at 70 pounds and the main reservoir side at 90. With this arrangement,

Digitized by Google

if the governor diaphrams are not set for the proper pressures, the brake pipe pressures in running and full release positions will not be right.

With the Double Pressure system, where a low brake pipe pressure is carried with empty cars and a higher one with loaded cars, both sides of the duplex governor are piped to the opening E. In the pipe leading to the low-pressure side of the governor there is a cut-out cock, when this is shut the higher brake pipe pressure will be carried.

With the Triplex governor one air diaphram is connected to the brake pipe and set at one standard pressure, the second diaphram is set for a higher brake pipe pressure, and the third diaphram is connected to the main reservoir air and set at the pressure desired there. There is a cut-out cock in the air pipe leading to the lowest brake pipe diaphram, which can be closed when necessary to carry a higher brake pipe pressure; this cuts the lowest one out of service. The diaphram 13 gets gummed up on the seat of 14 so that in some cases air leaks by it and the governor piston is operated before the proper pressure is reached. Or it may get gummed up so much that air can not pass down to the piston. For defects common to governors, see front of book.

THE 1902 MODEL BRAKE VALVE

The duty of the brake valve is to control the passage of air from the main reservoir to the brake pipe; from the brake pipe to the atmosphere or stop the flow of air through it in any direction. The engineer's brake valve, when in full release position, should allow the main reservoir air to flow directly to the brake pipe through large ports to equalize these pressures quickly. It should allow the air to pass through smaller openings in running position and maintain a higher pressure in the main reservoir after the brake pipe pressure has reached a standard amount. It should have a moderate opening

Digitized by Google

Engineer's Brake Valve.
1902 MODEL.

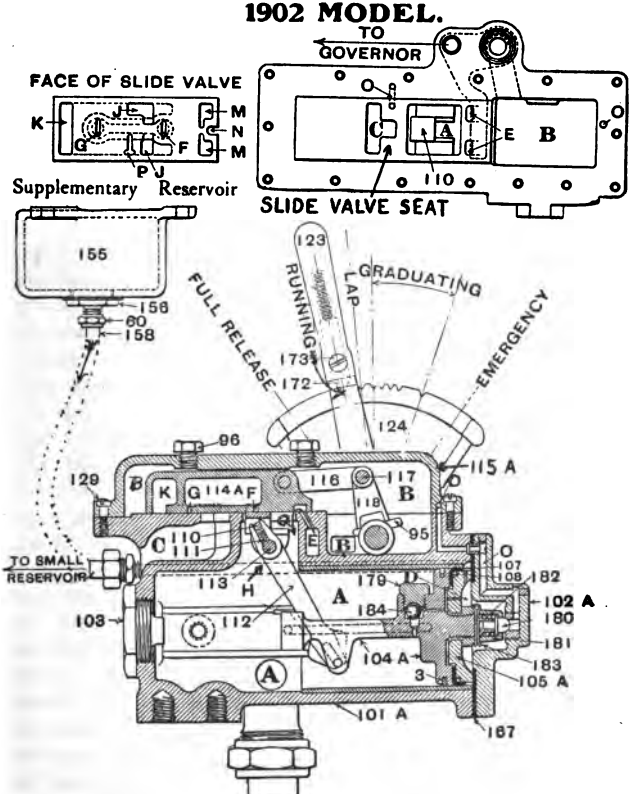

Digitized by Google

for the brake pipe air to pass to the atmosphere in a graduated service application, and should automatically close the opening when the brake pipe pressure has been reduced the desired amount to operate the triples with a graduated application. It should also have a large and direct opening to the atmosphere to exhaust the brake pipe air quickly in an emergency, so the triples will operate quick-action.

The New York Brake Valve is shown in a sectional view. The brake valve body, 101-A, contains a main slide valve, 114-A, which is moved back and forth over the slide valve seat by the slide lever 118 and links 116; this lever is attached to lever shaft 120, and moved by handle 123. Plugs 96 can be taken out to oil the slide valve 114. Main reservoir air enters the body of the valve, passing up into chamber B, and is all around the sides and on top of slide valve 114-A. It also passes to the red hand of the gage and to the high pressure side of the duplex governor. The black hand gets air from the brake pipe side of the brake valve. When this valve is in full release position, main reservoir air passes directly through the port *a* into chamber A, which is connected with the brake pipe directly, so that in this position main reservoir air can equalize with the brake pipe; if the duplex gage is right both hands will show the same pressure. When the handle 123 is moved back to running position, port *a* is covered by the end of the slide valve so no air can pass through *a;* main reservoir air must then pass from B under excess pressure valve 97, raise it against the stiffness of its spring 90, pass through E into the cavities M-M in the face of the slide valve and through *a* into A. Brake pipe pressure is also holding valve 97 down in addition to the stiffness of spring 90, so that with main reservoir pressure on one side and brake pipe pressure on the other side of 97, spring 90 is able to maintain a steady difference in these pressures, at whatever amount the main reservoir pressure may be. This difference is usually 20 pounds.

Digitized by Google

Two sectional views are shown giving the position of the excess pressure valve 97, the ports from B to E, and showing the main reservoir, brake pipe and gage connections. The connection to the supplementary reservoir and port H is shown on the side elevation.

In the lower part of the valve body, 101-A, is a piston, 104-A, moving in a bushing; this piston by means of the

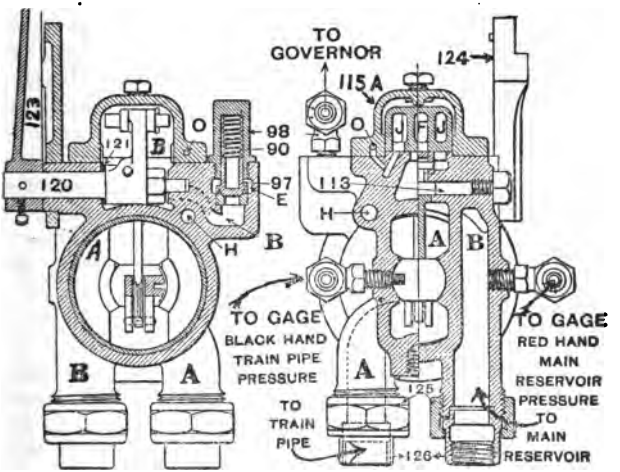

graduating valve lever 112, can move the graduating or cut-off valve 110, which rests against the lower face of slide valve 114-A, and in its normal position covers the port F that is connected by a passage through the middle of the slide valve with port G, which in service position is open to the atmosphere through cavity C. When the slide valve is moved to the first notch in service application position, brake pipe air can flow from A through *a*, ports F and G into C, and reduce the brake pipe pressure. Chamber D on the other side of the piston 104-A is connected with the supplementary reservoir 155, which has a pressure in it at the beginning of the brake pipe reduction

Digitized by Google

equal to that in the brake pipe. As the brake pipe pressure is reduced, the air in chamber D and 155 expands, and moves piston 104-A towards the reducing brake pipe pressure in A, this in turn moves cut-off valve 110 back and closes port F, thus cutting off the flow of brake pipe air to the atmosphere, without any movement of the handle 123 to lap position; this is expected to reduce the brake pipe pressure about 4 pounds. A further movement of handle 123 to the next service notch will move valve 114-A so that port F will be again opened; when the proper reduction has been made, cut-off valve will again close port F. Successive reductions can be made by moving handle 123 to the next service notch till the last one is reached, when the brake pipe pressure will have been reduced about 23 pounds, and the brakes applied in full service. The size of the supplementary reservoir is such that when the air in it expands into the additional space made when piston 104-A moves clear forward, the pressure will be reduced from 70 to about 47 pounds, or a little over two-sevenths of the original pressure; with a higher pressure the total reduction will be greater.

To reduce the brake pipe pressure suddenly and directly, 123 is moved at once to the emergency position; this opens the large ports J-J to A so that brake pipe air passes through two passages; one on each side of F-G and out at K to C. This sudden discharge of brake pipe air through the large openings will reduce the pressure quickly and operate the triples quick-action. After any application, whether service or emergency, the brake valve should be placed in full release position till the brake pipe has been charged its full length, and all triples moved to release position, if it is desired to release all brakes properly.

If piston 104-A has been moved forward by the pressure in chamber D at the time of a reduction of brake pipe pressure, it must be moved back to its normal position when the brakes are released if it is to be ready to move cut-off valve 110 to graduate the next brake pipe reduc-

Digitized by Google

tion. To do this some of the air in chamber D and reservoir 155 must be discharged to the atmosphere. This is done through port and passage O, which passes through the valve cover 115-A as shown in illustrations, back into the valve body 101-A and out to C through port J when the valve is in full release, or through cavity P in the slide valve when in running or lap position. Another passage, H, connects chamber D at all times with reservoir 155, so that when air can pass out of chamber D through O, it can also pass out of reservoir 155. With air exhausting from chamber D and brake pipe pressure in A, piston 104-A is at once moved back to its normal position; also moving cut-off valve 110. In the end of piston 104-A is a valve, 180, that closes port O when the piston is in the normal position and the brake valve in full release, running position or lap, and prevents any air from chamber D flowing out at port O. Air from the brake pipe can flow from A up past ball valve 184, and recharge chamber D at all times when the pressure is less in D than in A; but cannot flow back into A as the valve 184 prevents this. This recharges chamber D and reservoir 155 as soon as piston 104-A moves to normal position and seats valve 180, closing passage O. The opening past ball valve 184 and through the piston into chamber D, is much smaller than O, so chamber D air can be exhausted through O faster than it can feed in at 184, this ensures the movement of piston to its normal position. The older pattern of Vaughn-McKee valve does not have this recharging attachment, and in all cases in releasing brakes the valve *must* be replaced in full release an instant to discharge the air from chamber D, then moved to running position to recharge chamber D, in order to get the graduating action of piston 104.

As the supplementary reservoir is supplied with air from the brake pipe, while this reservoir is charging after an application and release of the brake on a lone engine with the older type of the Vaughn-McKee valve, the brake pipe pressure will be reduced at the instant of placing the

Digitized by Google

valve on running position. This reduction of pressure may apply the engine brake; as soon as air begins to pass the excess valve the brake should release.

If the supplementary reservoir pipe is broken or leaking so a blind joint must be made at the valve, there will be so little air in chamber D that the equalizing piston will not move valve 110 to graduate and stop the flow of air from brake pipe, and handle 123 must be moved to lap position to stop the discharge of brake pipe air.

As this valve has two sets of exhaust ports, one small for the service application and a large port for the emergency application, the work of reducing the brake pipe pressure is very easily regulated.

DEFECTS OF THE BRAKE VALVE

If air leaks past main slide valve into brake pipe, it will not maintain excess pressure, if the valve is in service or lap position during an application of the brake this leak will recharge the brake pipe and release the brake. To test for this leak, place the valve on lap, close the cut-off cock and start the pump; any leak into the brake pipe will be shown on the black hand. If the leak is only shown when the valve is in running position, the excess pressure valve is at fault; it usually only needs cleaning. While doing this do not scratch either the valve or its seat, or it will surely leak after cleaning. If the cut-off valve 110 leaks, it will not stop the flow of air from the brake pipe in a service application; you can hear the continuous blow at the exhaust opening. This blow will stop if you move the valve back to lap. If the cut-out cock is closed, the black hand will drop to zero, unless there is a leak into the brake pipe cavity A. A leak through the leather gasket under the cap 115-A that allows main reservoir air to get into port O, will cause a blow at the exhaust in any position between lap and full release. In any other position it will charge chamber D

Digitized by Google

direct from the main reservoir. The openings in the gasket at O should be the exact size of the port O.

A leak from the supplementary reservoir or its connections, if to the atmosphere, is easily detected, and should be remedied if the automatic closing of the cut-off valve 110 is to be satisfactory. This leak will reduce the pressure in the reservoir so the piston 104 will not move. A leak from chamber D back into the brake pipe can be detected by closing the cut-out cock under the brake valve, placing the valve in emergency for an instant to empty chamber A and then in the second service notch; a leak into chamber A will be shown on the black hand. This leak may be past the leather packing ring or by the ball valve. Before making this test be sure main slide valve does not leak from main reservoir into brake pipe. Lost motion between handle 123 and main slide valve will allow the slide valve to leave the ports only partially open; this will affect the release of the brake very seriously. This affects a brake pipe reduction when made in the first graduating notch.

THE STRAIGHT AIR BRAKE

The Straight Air Brake valve shown in Figs. 1 and 2, has a slide valve 227, which is moved by the lever 222 with its lever shaft 224, and slide valve lever 232. When in release position, Fig. 2, the port *b*, leading from the brake cylinder pipe is connected with the exhaust *e* by the cavity *c* of the slide valve. To apply the brake the handle 222 is moved to application position. This moves valve 227 so as to lap or cover the exhaust port *e* and uncover port *b*. Main reservoir air, which has been reduced to 45 pounds at the reducing valve, Fig. 3, can then flow from A into *b* and thence to the double check valves and brake cylinders. Gasket 121 prevents leakage of air along the shaft 224. The reducing valve shown in Fig. 3 is located between the main reservoir and the brake valve. The diaphram complete consists of the stem 21, the washer

Digitized by Google

23 and the rubber diaphram 32. It is held down against the air pressure in B by the regulating spring and its stem 19. As long as the pressure in B is less than the regulat-

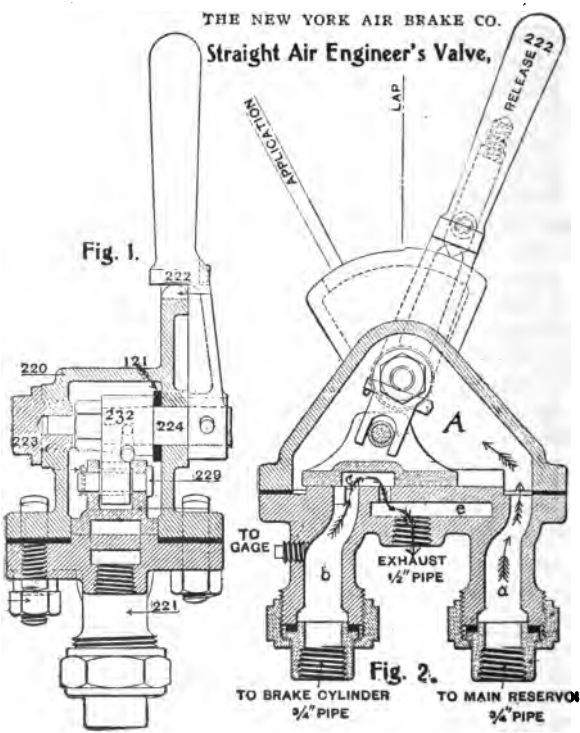

ing spring is adjusted for, which is 45 pounds, the feed valve 26 is held off its seat. When this pressure reaches 45 pounds, the spring should allow the diaphram to raise and allow feed valve 26 to seat, thus shutting off the flow of air from A into B.

The safety valve, Fig. 6, has a release lever to raise the valve off its seat to lower the brake cylinder pressure

Digitized by Google

when necessary. This safety valve for the driver brakes can be located in the cab, if desired, and is to set at 52 pounds, as is the tender brake safety valve.

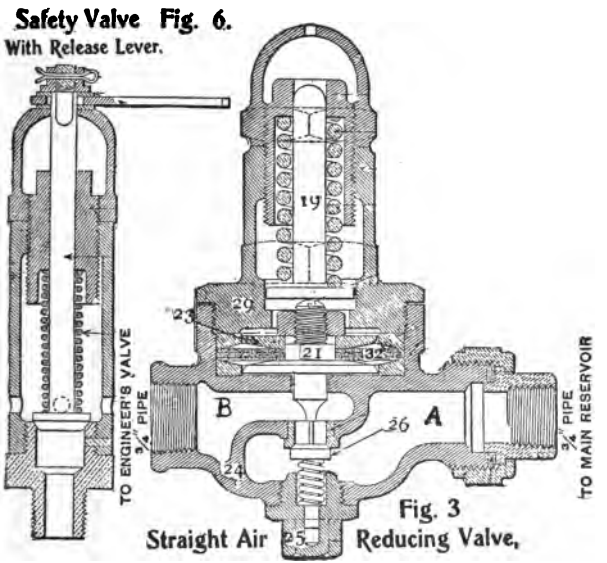

The double check valve used is shown in Fig. 4, question 38. The same rules apply to the operation of this straight air brake as to the Westinghouse equipments.

The B2 Brake Valve is designed to operate the automatic brake on train and engine in the same manner the 1902 model valve does, and in addition apply the driver brake with straight air, this does away with a separate straight air brake valve. It also operates an accelerator valve that passes air out of the brake pipe to the atmosphere during a service application on a long train and thus makes the operation of the triple valves more positive and quicker. There is a duplex controller that regulates the supply of main reservoir air to the brake valve

Digitized by Google

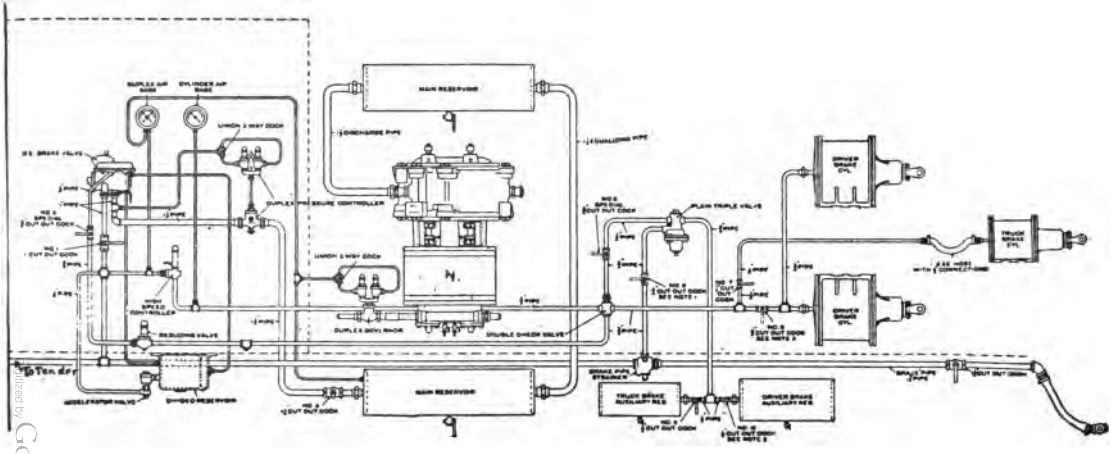

PIPING DIAGRAM B2—HS EQUIPMENT.

Digitized by Google

by reducing it to brake pipe pressure before it reaches the brake valve, so the pressure in the main reservoir side of the valve will not rise above the standard desired in the brake pipe, this does away with the excess pressure attachment used with the 1902 model. The arrangement of this equipment is shown in piping diagram on this page.

There is no ball check valve 184 in the piston, chamber D being charged from the air in B around the slide valve

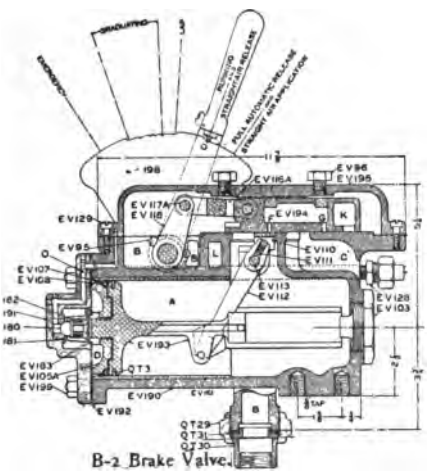

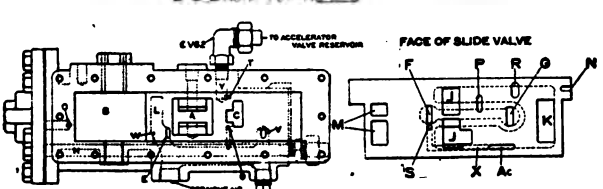

through a small port W in the valve seat leading into passage H and the supplementary reservoir. Passage O and vent valve 180 in this valve serve the same purpose as

Digitized by Google

in the 1902 model, to discharge air from chamber D so that brake pipe pressure can return piston 193 to its normal position, when valve 180 closes port O.

A sectional view of the B2 valve is shown, also a plan of the face of the slide valve and its seat. The chief differences between this valve and the 1902 model are the ports in the slide valve and the seat. Two ports, E and V, in the seat are connected by a cored passage shown by dotted lines through the valve body and located above passage H, into this passage the pipe leading to the brake cylinders is attached. When the slide valve is clear ahead in full release it uncovers port E so air from the top of the valve in B can pass through the reducing valve set at 40 pounds, to the brake cylinders, this applies the engine brake straight air. Air from B passes by the end of the slide valve and also through ports M in the slide valve into the brake pipe as fast as the air can pass the controller, releases the train brake and charges the brake pipe and auxiliaries. Port T in the seat, leading to the accelerator reservoir is open through J in the slide valve and exhaust C to the atmosphere and port O is the same as explained with the 1902 model. Port W is open and keeps chamber D equalized with B. In this position the train brake is released and the driver brake set straight air.

In running position the slide valve is moved back covering port E so no more air passes to the brake cylinder pipe, port V in the seat registers with R in the valve so brake cylinder air can exhaust through R, J and C, this releases the driver brake. Air can pass to the brake pipe through the large ports M in the slide valve so running position releases both the train and driver brakes. Ports O and T are still open to J and the atmosphere. On lap all ports are blanked except port O, this is left open to return the piston and graduating valve to normal position, if a service reduction has been made so the valve will graduate at the next reduction.

In the graduating positions, ports F and G are opened

Digitized by Google

by a movement of the slide valve and port F closed by the graduating valve as with the 1902 model. But as port S in the valve is opened at the same time with port F, when air is flowing from F into G, it is also flowing through S, the passage X and into the opening Ac that is connected by port T in the seat and Y to the accelerator reservoir. As soon as the proper brake pipe reduction for that notch is made valve 110 will close ports S and F. A movement of the handle to the next notch will open ports S and F again and valve 110 will close them; brake pipe air flows to the accelerator valve chamber at the same time it flows through F and G and exhaust C. When the last graduating position is reached the restricted passage N in the end of the slide valve has been moved over port V so air begins to flow from the brake valve to the brake cylinder. As the engine triple valve has been sending air to the cylinders during the service application the supply of air through port V tends to maintain the pressure during a full application. The action of the valve in emergency is exactly like that of the 1902 valve before described. The reducing valve used with this equipment is the same one described in connection with the Straight Air Brake.

B-3 BRAKE VALVE

This valve in some respects is similar to the B2 just described. The engine and tender brake have triple valves for automatic service and double check valves to enable straight air to be used, which can be applied in full release or emergency positions releasing it in running position whether applied with straight air or automatically, with this valve the main reservoir pressure is reduced to 40 pounds before reaching the brake valve for use in straight air applications. It operates the accelerator valve in the same manner as the B2, using the same design of divided reservoir.

The piping diagram of the B3 when compared with

Digitized by Google

B3-HS LOCOMOTIVE BRAKE, EQUIPMENT.

ENGINE ONLY.

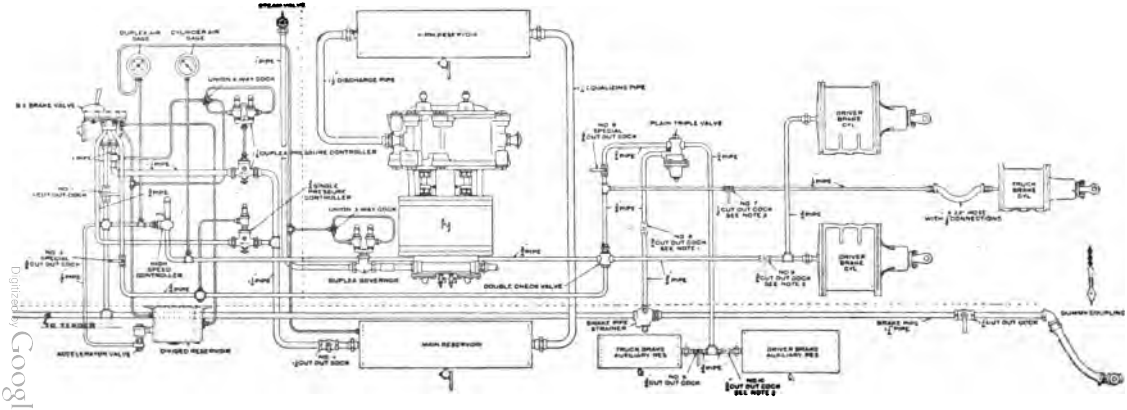

Digitized by Google

the B2 will show some of the differences. A sectional view of the complete valve, also a plan of the slide valve and its seat is shown so the differences between the ports and cavities in the B2 and B3 are plain. The valve cover is fastened to the body by tap bolts instead of screws; port *o* is cored through the body instead of being drilled through the cover, it does not show in the sectional side elevation. The plan of the valve seat and body shows a pipe bracket bolted to the side, dotted lines show the cored passages to port N and from port E through which air passes on its way to the brake cylinders in a straight

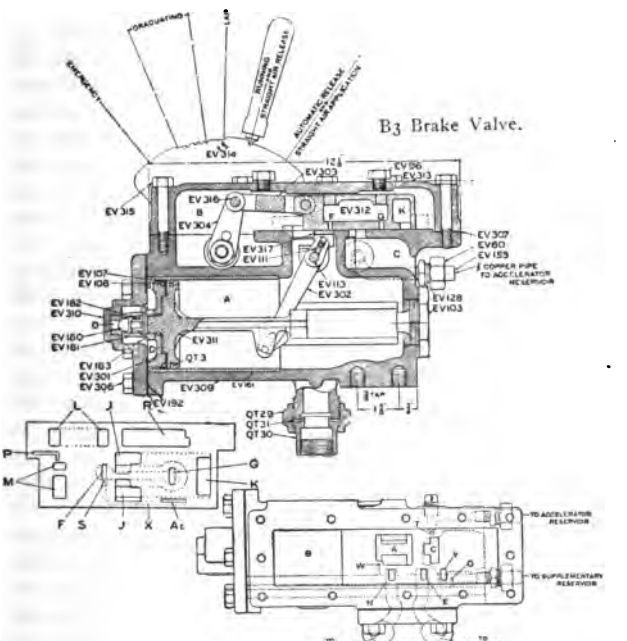

air application. V is the straight air exhaust port; C is the brake pipe exhaust port; *o* is the discharge port

Digitized by Google

through which the air from behind piston 311 can pass out in full release, running and lap positions; T is the port leading to the accelerator reservoir; W leads to the supplementary reservoir and chamber D behind piston 311; A is the opening through which main reservoir air that enters at B can pass into the brake pipe in release and running positions. On the plan of the face of the slide valve, M-M are two openings in the end of the valve through which this air passes in release and running positions as well as passing by the end of the valve in full release; port F is connected to G by a passage through the body of the valve 312, better shown in the side elevation and used in service application to pass air from A to C; ports J-J are likewise connected with K and large enough to make the emergency reduction from A to C; groove P in the face of the valve serves to charge chamber D and supplementary reservoir through port W in release and running positions; ports L-L are connected by a cavity in valve 312, they register with ports N and E for the straight air application in full release; cavity R connects E and V in running position to release the straight air brake, and to discharge air from port *o* in release, running and lap position. Port S connects with cavity through Ac, a passage shown by dotted lines; cavity Ac is over port T leading to the accelerator reservoir in the graduating positions so that some of the brake pipe air escaping during a service reduction can flow to the accelerator reservoir and build up a pressure there to operate the accelerator valve; port T is open to J in running position so air can all escape from the accelerator reservoir.

Main reservoir air reduced to the standard brake pipe pressure at the duplex controller comes into the brake valve at B and is around the slide valve, in automatic-release and straight-air-application position air flows through ports M and by the end of valve 312 into the brake pipe and equalize there with B. Main reservoir air also passes the single pressure controller set at 40 pounds into port

Digitized by Google

N then through port E, the double check and into brake cylinder. Port *o* is open to cavity R and port V so air behind piston 311 is discharged to allow brake pipe air to force the piston to normal position, when in normal position valve 180 closes port *o* at that end and no more air can pass through *o*, the supplementary reservoir will then charge through port W; port T is open through J and C. Placing the brake valves midway between release and running position will lap the straight air ports N and E so no air can pass in or out of the brake cylinders through the brake valve and will hold the engine brakes partially applied.

Running position will release both automatic and straight air brakes, the straight air will come back through port E and passing into cavity R will escape through V into C. In lap position all ports are closed, except *o*, this open port is to return piston 311 to normal position in case it has been moved in a service application and the brake valve moved to lap. There are five service or graduating positions, each having a notch in the quadrant, they are calculated to make automatic reductions from 70 pounds brake pipe pressure of 5, 8, 11, 15 and 23 pounds, or in that proportion for any higher pressure. In any service reduction, ports F and S in the face of valve 312 are open, F to the atmosphere through G; S to Ac and the accelerator reservoir till the brake pipe reduction is sufficient to allow air in chamber D to move piston 311 and cut-off valve 317 to close them. In the last graduating notch cavity R opens to port N a very little so main reservoir air can flow from N to E, into the double check and cylinders and reinforce the automatic application if it has leaked below 40 pounds.

In the emergency position ports J and K allow the brake pipe air to flash out to the atmosphere, this sudden reduction of brake pipe pressure operates all triples as quickly as possible. The straight air is also set full on through ports N and E in case the triple valves does not make the cylinder pressure on the engine above 40 pounds.

Digitized by Google

The reducing valve for the straight air brake is a ¾-inch single controller, the regulating top is connected with a small pipe with the pipe leading from the B3 valve to the double check, so the controller operates to close off when the pressure builds up in this pipe to 40 pounds. With no air in this pipe the controller is open and main reservoir air comes as far as port N without any reduction. In all other respects the equipment of divided reservoir, accelerator valve, safety valve and high speed controller is the same as with B2.

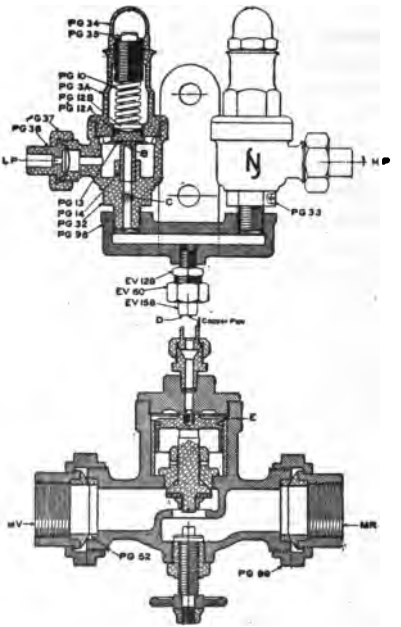

DUPLEX CONTROLLER.

Digitized by Google

THE DUPLEX CONTROLLER

This valve is located between the main reservoir and the brake valve; its duty is to reduce the main reservoir pressure to that required in the brake pipe before reaching the brake valve. There are two forms of it in service, only the latest form of it is here illustrated. In its construction it is like the duplex pump governor, except that its valve has a leather seat. The regulating tops can be located in the cab and connected to the controller body by a copper pipe. One of the tops is adjusted for the ordinary brake pipe pressure, the other for the higher pressure used with the High Speed Brake. When one side is cut in by the union three-way cock the other is cut out, either one of the two pressures can be carried in the brake valve and brake pipe. The description of the duplex pump governor and its operation will be sufficient to show how the controller operates. Air enters at the opening marked MR, if the controller valve is open it can pass through and out to the brake valve at BV. When necessary in steep grade work to have full main reservoir pressure in the brake valve the controller valve can be held open by screwing the hand wheel up the full travel of its screw.

THE ACCELERATOR VALVE

This valve is intended to discharge brake pipe air during a service reduction in addition to that taken out by the brake valve. It has a divided reservoir; one side for the accelerator valve to which the valve is bolted, the other is the supplementary reservoir for the brake valve. When air from the brake valve during a service reduction passes through ports S and T to the reservoir it also comes through port Q over piston 65. With a short train, less than ten cars, port S is closed by the graduating valve before sufficient air has passed into the accelerator chamber to operate its valve. With a train of over ten

Digitized by Google

cars the pressure in the chamber will build up till it is sufficient to force piston 65 and with it stem 67 and valve 74 down against the tension of spring 31 in the bottom of the valve. In valve 74 is an oblong port *a* and in the seat a Λ shaped port *b*. When valve 74 is moved down port *a* first opens to the pointed end of port *b*, and brake pipe air coming in at the opening TP begins to flow out of *b* slowly. As the valve 74 is moved farther down by the increasing pressure of the air above piston 65, ports *a* and *b* are opened wider till their full opening is made; this gives a gradual discharge of brake pipe air that with a long train begins about four seconds after the brake valve begins discharging air. It requires 15 to 17 pounds pressure in the chamber to operate the valve. Through piston 65 is a small port S through which air that comes over the piston can discharge into the space under the piston and then to the atmosphere through port T; air flows out here at the same time it comes into the reservoir and prevents any sudden rise of pressure in the reservoir.

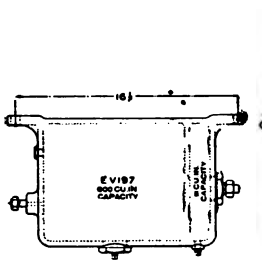

Divided Reservoir.

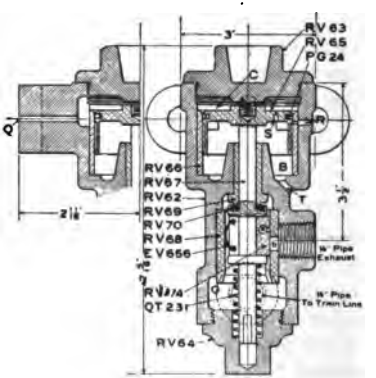

When piston 65 moves down it uncovers port R in the bushing, this also takes air out of the reservoir. As soon as the graduating valve laps port S in the brake valve,

Digitized by Google

no more brake pipe air will flow to the chamber; ports S and R in the accelerator piston will then gradually reduce the pressure in the chamber and allow spring 31 to move valve 74 and piston 65 up, gradually closing ports *a* and *b*. When piston 65 closes port R the flow of air out of S alone is so much slower that piston 65 gives a very slow closure to port *b*. The gasket 70 makes a tight joint on its seat around stem 67 when the valve is closed, so brake pipe air cannot escape around the stem.

THE HIGH SPEED CONTROLLER

The high speed controller connects with the brake cylinder pipe at BC and to the brake pipe at BP, so that brake pipe air pressure is always in the body of the valve and when greater than brake cylinder pressure will hold

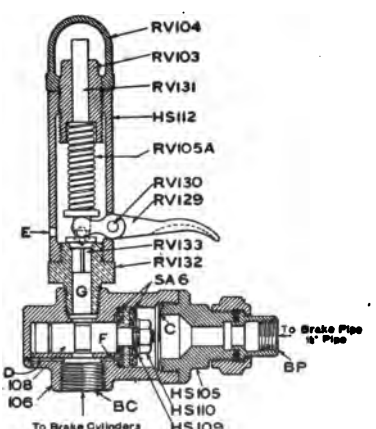

piston 107 in normal position as shown, leather gaskets are on each side of the piston to make the joint tight. A moderately large opening around the valve 108 allows air from the cylinder to reach the safety valve freely and

Digitized by Google

rapidly reduce any excess of pressure above that the safety valve is set for, this takes place in a service application. In an emergency application the brake pipe pressure is suddenly reduced below what the brake cylinder can build up to, and piston 107 will move over to the right with the leather gasket resting against the seat C. This brings the small valve 108 under passage G so the cylinder air blows down gradually in this position till the limit for which the safety valve is adjusted is reached, this should be 53 pounds. Ports D and F are to allow cylinder air quick access to the ends of the valve 108 and piston 107 so they will move with a low difference of pressures on piston 107.

The Automatic Control equipment of the New York Brake Co. is for locomotive service, either with or without the train brakes. The piping diagram shows the various parts, the automatic brake valve; double pressure feed valve; reducing valve; pump governor; strainer check valve and safety valve are the same in construction and operation as those described in answer to questions 35-37, so they need not be described again here. The straight air brake valve and double throw check valve have been described in the New York equipment a few pages previous. The straight air brake valve is used to pass air directly to and from the locomotive brake cylinders, it does not send any air to the Automatic Control valve as the independent brake valve does to the distributing valve in the ET equipment. The double throw check valve is located in the pipe line between the brake cylinders and the straight air brake valve on one side and the Automatic Control valve on the other side; the duty of this double throw check is to close the exhaust to the straight air valve when the control valve is operated and vice versa. A safety valve is attached to the control valve and a release valve or bleeder to the retaining pipe between the control valve and the automatic brake valve. Stop cocks are located in the various pipes to cut out the air when necessary and choke fittings near the

Digitized by Google

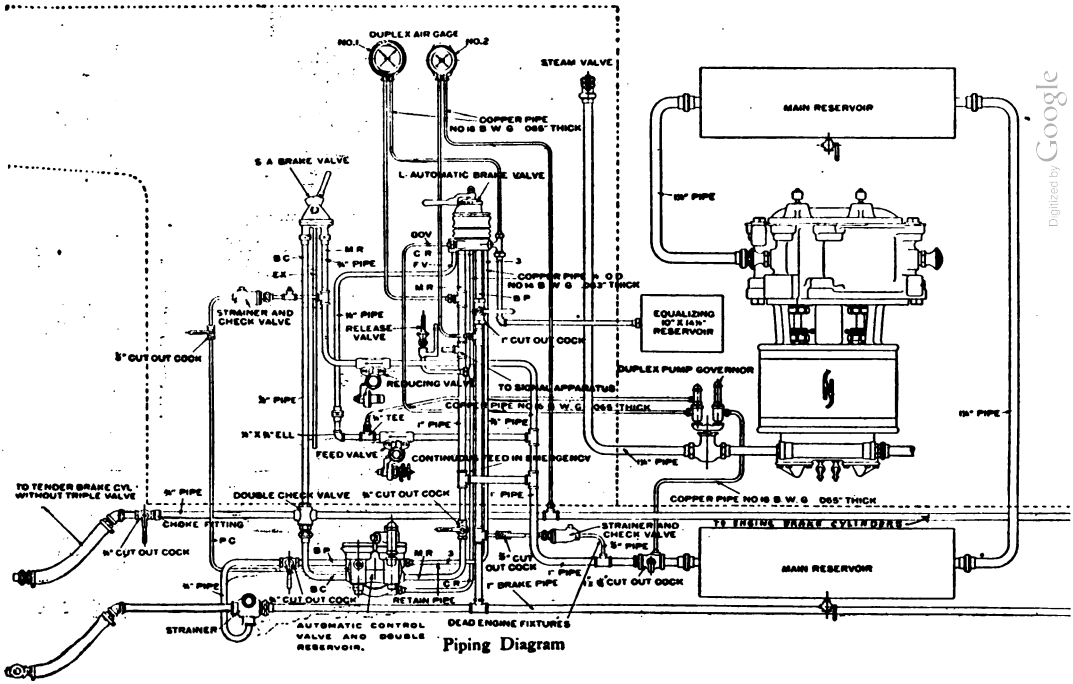

Piping Diagram

Digitized by Google

hose connections leading to the tender brake and engine truck brake to hold the air back in case either of these hose burst or come uncoupled. The double chambered reservoir is the same as shown with the ET equipment.

Automatic Control Valve

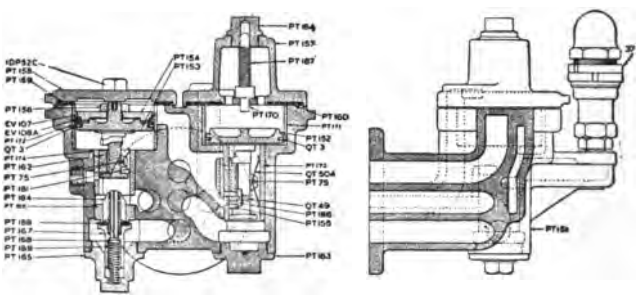

The Automatic Control valve is shown in two sectional views, the view at the right shows the passages to the double chambered reservoir, the left one a sectional view from in front. On another page is shown a diagrammatic view, as the air ports and valves cannot be shown in a correct sectional view. This cut shows the double chambered reservoir attached at the bottom of the valve, the reservoirs are of such a relative size that they will equalize at 50 from 70 pounds in the auxiliary.

The valve is in full release position, triple valve piston 3 is at the bottom of its cylinder so feed port at G is open, slide valve 4 and graduating valve 10 are in normal position to exhaust air from the control reservoir and chamber D above control piston 2. Control piston 2 is at the upper end of its cylinder in normal or release position, by it exhaust valve 7 is held open so brake cylinder air coming in at C can escape at exhaust N. Main reservoir air comes in at A at full pressure around admission valve 1, spring 8 holds this valve on its seat when there is no air pressure to do it. Brake pipe air

Digitized by Google

FULL RELEASE

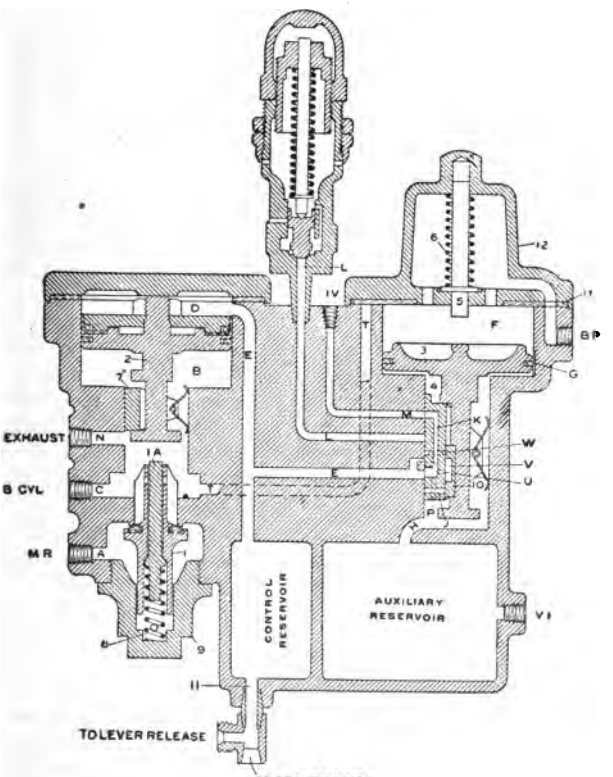

Automatic Control Valve.

Digitized by Google

comes in over piston 3 at BP; at IV is the exhaust through the control cylinder release pipe connected to the automatic brake valve; the control reservoir pipe is at II and the continuous feed pipe from the reducing valve pipe of the straight air valve to the auxiliary reservoir is at VI. The safety valve is attached to port L and will blow down the pressure in the control reservoir to standard with either a full service or emergency application; with the triple valve on lap the safety valve is cut out.

To operate this valve after the auxiliary reservoir is charged to standard pressure from the brake pipe, a brake pipe reduction is made. Piston 3 at once moves up following the reduction in F carrying with it graduating valve 10 and slide valve 4; closing feed groove G; moving valve 10 to uncover port J in slide valve 4, which is moved up so port J registers with E in the seat, also lapping exhaust port M. Air from the auxiliary reservoir now flows into the control reservoir and D over control piston 2 building up a pressure in both places. When the pressure in the auxiliary is a little less than that of the brake pipe, piston 3 will move down carrying valve 10 with it and lap port J so no more air can go into D and the control reservoir. Pressure on piston 2 will move it down carrying valve 7 down over exhaust port N, a farther movement will push preliminary admission valve A1 off its seat in admission valve 1, this allows air in O to flow out into B; as air cannot get by the guide case or extension of 1 as fast as it gets out, this tends to balance valve 1 so piston 2 can open it easily. Main reservoir air then flows into B and the brake cylinders till the pressures there are a little above that in D and the control reservoir, piston 2 then moves up and allows valves 1 and A1 to close, but does not open exhaust valve 7, this holds the engine brakes applied automatically. If, on account of leaks, the brake cylinder pressure drops, it will be less than in D, piston 2 will at once open the admission valve and raise the cylinder pressure and in

Digitized by Google

B till it can push piston 2 up so admission valve can just supply the leak. For a full application the brake pipe pressure is reduced 20 pounds from 70, this will hold triple piston up and slide valve ports open, equalizing the auxiliary and control reservoirs.

If, on a full application the pressure in the control reservoir exceeds the adjustment of the safety valve, it will blow down, the brake cylinder pressure will not build up any higher than that in D. Air from the control reservoir can flow to the safety valve from port E through U, cavity V in valve 10 and port W into L.

When an emergency application is made, piston 3 and its valves make a full travel at once, valve 4 uncovers port E so auxiliary air can flow quickly into D forcing control piston 2 down, operating its valves in short order. Port P in the slide valve now registers with port L so air from the auxiliary and control reservoirs can get to the safety valve. A small port in the automatic brake valve (if the rotary is in emergency position), will send a supply of main reservoir air through the pipe marked CR on the piping diagram into the control reservoir at II, this will hold the pressure there up to where port P can handle it all to the safety valve, thus giving a higher braking pressure in the emergency than in a service application.

A quick-action cylinder cap for the triple valve can be furnished if desired that will vent some of the brake pipe air to chamber B below control piston, this will operate the car triples quicker than when the reduction is made at the brake valve only.

To automatically maintain the pressure in the auxiliary reservoir there is a pipe connected at VI that leads from the reduced pressure pipe between the reducing valve and the straight air brake valve, on the diagram this is marked PC. If from any cause the pressure in the auxiliary drops below the adjustment of the reducing valve (which should be set at 45 pounds), air can flow into the auxiliary and set the brake through the control

Digitized by Google

valve up to that pressure. To do this it moves the triple piston up against the depleted brake pipe pressure and passes into D, thus operating piston 2. There is a strainer check valve in pipe PC to prevent air at over 45 pounds getting back into the reduced pressure pipe and a stop cock to cut out the air in case the reducing valve gets out of order or the brake pipe is cut out. If at any time the pressure in the reduced pressure pipe

Strainer and Check Valve.

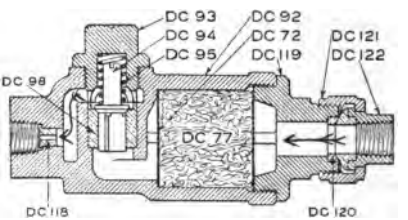

exceeds that in the brake pipe the engine brake will set and stay set.

To operate the locomotive brake automatically leave the straight air brake on release position and make the proper brake pipe reduction with the automatic brake valve. When releasing avoid overcharging the engine auxiliary by leaving the brake valve on full release too long as when you go to running position the drop in brake pipe pressure may set the engine brake. If the engine brake is to be held set and the train brake released go to full release and stay there a few seconds till all triples release, then go to holding position, this will not overcharge the brake pipe and will hold the locomotive brakes set, because air from control reservoir cannot escape after its triple goes to release till the brake valve is put in running position. When the straight air brake is used leave the automatic brake valve on running position and apply and release the engine brake with the straight air valve. To release the engine brake after it is set automatically without releasing the train brake also,

Digitized by Google

use the hand release valve or bleeder that is connected to control reservoir by pipe CR; by bleeding this reservoir piston 2 will be moved to open exhaust valve 7. The straight air brake valve will not release the engine brake when set automatically, the double throw check valve will prevent it.

At any time when set automatically the engine brake can be released by holding the bleeder open, but it has no effect when set by straight air as the double check valve will close the opening from the cylinders to the control valve.

THE QUICK ACTION TRIPLE VALVE

The Quick Action Triple Valve is used on passenger and freight cars and some passenger tenders. The one shown in section is the older type of freight car triple. The passenger triple valve for 12, 14 and 16-inch brake cylinders has the graduating valve 48 located on top of slide valve 38, and the service port through valve 38 as well as in its seat, the vent valve piston has the port F through the stem 129. The new type of freight triple also has the vent valve piston made like the passenger triple. These triples are shown in Plate R-24.

As some of the moving parts are at right angles to each other, this cut does not show them as clearly as the diagrammatic views. The same reference numbers and letters are used in both illustrations. Referring to page 196, the triple valve body 125 contains the two bushings in which main piston 128 and the valves 38 and 48 move; 126 is the front cap which contains vent valve 71 and its spring 132; it also holds the stem of 129 in position. The vent valve seat or "middle section" 130 makes the cap for the cylinder of the triple piston 128. 127 is the side cap and covers the quick-action valve piston 137. Main piston 128 is extended so that it forms a cylinder in which another piston, 129, is fitted, the stem of which passes through 130 and is held from moving to the right

Digitized by Google

Quick Action Triple Valve.

PLATE Q 6.

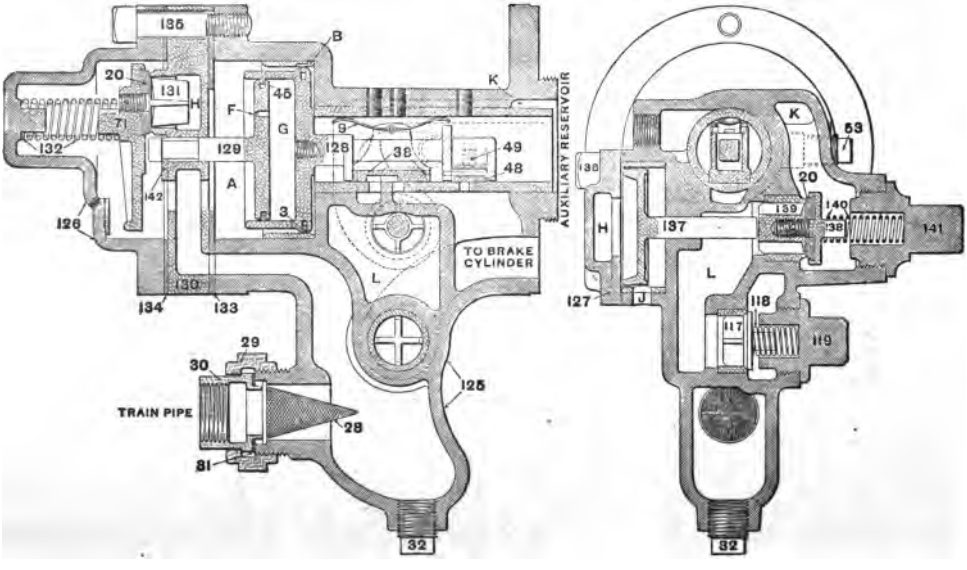

Digitized by Google

by a clip or piston stop 142, so that when piston 128 moves to release position vent valve piston is in its normal position, and a chamber, G, is left between the two pistons. A small port F through piston 129 allows brake pipe air to pass in and out of chamber G. This port is of such a size that when piston 128 moves slowly to the left in a service application, the air in G can pass out to the brake pipe side of piston 129, and piston 129 will remain stationary with regard to 130 and vent valve 71, as shown in service position. This vent valve is held on its seat by the pressure of the brake pipe air and spring 132.

In a graduated service application when the brake pipe pressure is reduced in A the auxiliary pressure in the auxiliary side moves piston 128 towards the decreasing brake pipe pressure, first closing the feed port B and moving graduating valve 48 with the piston. As soon as the lost motion between the piston shoulders and exhaust valve 38 is taken up valve 38 moves and closes the exhaust port so no brake cylinder air can escape to the atmosphere. The port to the brake cylinder under valve 48 is next opened, and air from the auxiliary flows to the cylinder, applying the brake. When the flow of brake pipe air out of the brake valve stops, the reduction in A also stops, and as valve 48 is still open the auxiliary pressure soon gets lower than that of the brake pipe so piston 128 is moved to the right and closes valve 48, but does not move valve 38; this holds the brake set. Another brake pipe reduction produces the same movements of the piston and valves and so on till the brake pipe reductions make the pressure lower than that of the auxiliary, when the piston will not move back to close the graduating valve 48. To release the brake the brake pipe pressure is raised higher than the auxiliary, this moves piston 128 and valves 38 and 48 to release position, covering the service port and opening the exhaust port.

The triple piston 128 makes a full stroke in either service or emergency application, the edge of cylinder 128

Digitized by Google

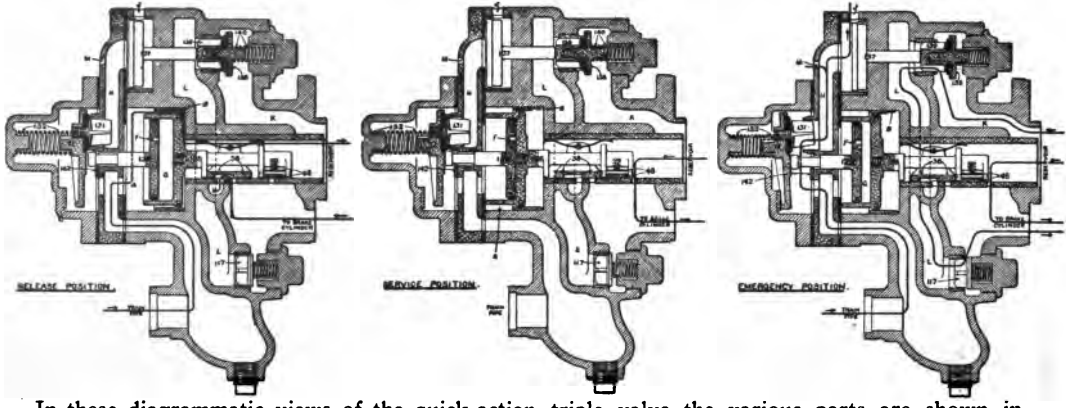

In these diagrammatic views of the quick-action triple valve the various parts are shown in a straight line; by comparison with the other sectional cut of the valve, their action may be easily traced. The arrows and lines joining them show the course of the air through the valve in each of the three positions.

Digitized by Google

striking the leather gasket 133, so that no graduating spring is used to assist in stopping the triple piston in the service position, and the piston does not get any assistance from a graduating spring when starting from emergency or full stroke towards release position.

If the reduction in brake pipe pressure is made so suddenly that the air in chamber G can not pass through port F fast enough to equalize with the brake pipe reduction, the pressure of air in G will move piston 129 over at the same time piston 128 moves. The stem of 129 will push vent valve 71 away from its seat, as shown in the emergency application; brake pipe air from the chamber around valve 71 can flow rapidly into passage H, and thence against the quick-action piston 137. This in its turn is moved to the right by the pressure of brake pipe air and quick-action valve 138 is unseated, opening a large passage for auxiliary air to flow through K into L—L, forcing check valve 117 off its seat; the air also passes into the brake cylinder through the usual opening at the graduating valve. No air from the brake pipe reaches the brake cylinder, only that from the auxiliary, but the auxiliary air passes through such large ports K and L that the equalization between the auxiliary and cylinder is almost instantaneous after valve 138 is opened. As soon as these pressures have equalized, check valve 117 closes and prevents brake cylinder air flowing back into L and thence around the stem of piston 137 to the atmosphere. In the meantime air in chamber G has equalized through port F so that spring 132 can push vent valve 71 and piston 129 to their normal positions. When vent valve 71 seats, no more air flows from brake pipe to passage H; air escaping from ports M and J at once reduces the pressure on piston 137, which is moved to the left, its normal position, by the stiffness of spring 140. Valve 138 is closed and no more air can pass from the auxiliary into L, and all the quick-action parts of the triple valve are returned to their normal positions. Piston 128 having made a full stroke, valve 48 is open so that auxiliary air

Digitized by Google

can pass into the brake cylinder and keep the pressures equalized. With 70 pounds auxiliary pressure and the standard piston travel the equalization is the same for full service and emergency applications, 50 pounds per inch.

Venting the brake pipe air to the atmosphere past valve 71 and through ports M and J, should reduce its pressure below that in the auxiliary; this will hold piston 128 in service position.

The sudden venting of brake pipe air to the atmosphere at this triple makes a sudden reduction at the next triple, which in turn operates quick-action, and so on from one triple to another to the end of the train; this is called the "serial" action.

If there are, close to the head end of the train, several triple valves cut out, or defective triples that do not operate the vent valve so as to vent enough air from the brake pipe, or cars with brake pipe only, the sudden reduction may not extend far enough to affect a quick-action triple so it works quick-action and continues the sudden serial reduction. About three "cut-out" triples next the engine is the limit to have the quick-action "jump over." At the rear end of the train the quick-action will jump more than three cars, because the volume of brake pipe air behind these defective triples is less than when they are near to the head end of the train.

This type of triple valve does not send any brake pipe air to the brake cylinder; the brake cylinder pressure is the same with either a full service or an emergency application; so that the same increase of brake pipe pressure is required to move the triple valve to release position. When brake pipe pressure is restored so that it is greater than auxiliary pressure, or the auxiliary pressure has leaked down, or been bled out, brake pipe air passing through port F into chamber G moves piston 128 and valves 38 and 48 to release position; this closes the service port, opens the exhaust port to release the air from the brake cylinder, and opens feed port B to recharge the auxiliary.

Digitized by Google

IMPROVED QUICK ACTION TRIPLE VALVE.
FOR 12 AND 14 INCH PASSENGER CYLINDERS.

PLATE R 24.

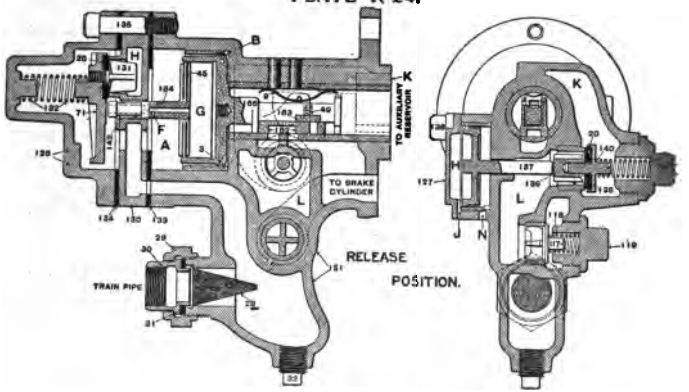

PLATE R 6.

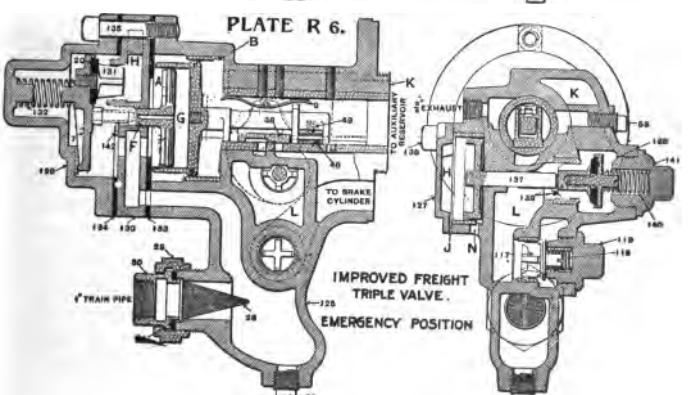

Digitized by Google

If the piston 128 is in lap position, the volume of air in chamber G is so small that in an emergency reduction of brake pipe air, the pressures can equalize through port F and piston 129 will rarely move. If piston 128 is in *service* position, it is at the end of its travel and can not move any further. Therefore, after pistons 128 in the triples have responded to a service reduction, ***no matter how light,*** the quick-action parts of these triples will not move and a sudden serial action of these triples will not take place; only a heavy service application. If the general rule to allow the air to pass out of the brake pipe at the brake valve or conductor's valve in cases of emergency or danger is promptly obeyed, all brakes that operate will be applied with the greatest power and in the shortest time possible under the conditions.

The passenger car triple shown in Plate R 24 has the graduating valve 48 on top of the exhaust valve 38 instead of at the end as shown in the next cut of R-6. Valve 48 is fitted into a notch in the piston rod so that it moves with the piston 128, having its seat on top of valve 38. When the triple piston makes its first movement in a graduated application, valve 48 uncovers the air port through valve 38 and allows auxiliary air to pass into this port, although air cannot pass into the brake cylinder till the exhaust valve has moved far enough to open the ports into the cylinder. Then when the triple piston moves back to lap position, valve 48 moves across the top of 38 and covers the air port; the lost motion between the ends of valve 38 and the shoulders on the piston rod allows the piston and valve 48 to move without moving 38. In this triple R-24, the passages from the auxiliary to the brake cylinder through the quick-action ports of the triple are much larger than in the older form, so that auxiliary and brake cylinder pressures equalize much quicker.

The improved freight triple valve, R-6, is shown in emergency positions, vent-valve piston is moved down so that the opening of port F through the stem is inside the

Digitized by Google

bushing of the center piece 130. This covering of port F chokes and retards the flow of air out of chamber G so that the vent-valve piston can not return to its normal position so quickly. It thus holds vent-valve 71 away from its seat longer, which makes a heavier reduction in brake pipe pressure. In all the later triples check valve 117 and quick-action valve 138 have rubber seats, and port F is in the stem of piston 129.

This later style of port F operates the same as the port through the piston, in each style the air from G can pass to the brake pipe the full size of port F.

DEFECTS OF QUICK ACTION TRIPLE

If vent valve 71 leaks, or is held off its seat, there will be a blow at the round port M, and sometimes at the two square ports J; also, the brake may not release as brake pipe pressure can not be raised enough to move triple to release position. If the vent valve piston stem 129 is bent or the piston sticks in the cylinder of 128, valve 71 will be held open. This piston stem 129 and the cylinder of 128 are easily damaged by improper handling, and should be carefully handled when taken apart. A small leak at valve 71 will show at the round hole M. If there is a blow at the square ports J in the triple shown in Plate Q-6, and not at M, or at N in the triples shown in R-6, air is probably coming from the quick-action valve 138 and thence past the stem of 137, which is not an air tight fit in the cast iron body of the triple. If the air passing by valve 138 can not go by stem 137, it will, when the triple is in release position, pass check 117 and out the exhaust port or pressure retainer, or leakage groove. A leaky packing ring in piston 128 will affect the prompt movement of this piston to release position, as the air can leak by this defective ring and equalize the auxiliary with the brake pipe without moving the triple piston. A leak by this ring will not affect the quick-action operation of piston 129. If either of these rings are fitted too tight,

Digitized by Google

this particular triple piston may not move when the others do in the initial reduction of a service application, and when it does move it may cause quick-action at this triple only. If the packing ring in piston 129 leaks, the air in G can pass out by this ring and this triple is not likely to go into quick-action.

A leak under the seat of valve 38 will allow auxiliary air to blow out the exhaust steadily. If under valve 48 in the triple shown in Plate Q-6, it will blow at the exhaust when the triple is in release position. With the triple shown in R-24 it will leak in lap position only, and then into the brake cylinder. If the packing ring in either piston 128 or 129 is too tightly fitted or gritty, the triple may work slower than the others, and get quick-action with a moderate service reduction; this will vent a little brake pipe air to the atmosphere at that triple, but will not cause any other New York triples to work quick-action. If the stem 129 is bent or cylinder of 128 is bent or damaged, it may produce the same effect. This defective triple can usually be located by the flash of air from ports M and J towards the ground which will blow the sand or dust. This brake may release at once if the pressure in the brake pipe is not reduced at that time below that at which that auxiliary and brake cylinder equalizes.

Sand works into the ports M, N and J and may cause the quick action piston 137 to stick after a quick-action application; this will hold valve 138 open so auxiliary air will leak away.

Leaks by the gasket between the triple and the auxiliary on a freight brake, or the triple and the cylinder head on a passenger brake allowing auxiliary air to pass to the cylinder, will give a steady blow at the exhaust port while the triple is in release position.

If the port F has been enlarged or the packing ring in piston 129 is a poor fit, so it leaks, this triple may not go into quick-action when the sudden brake pipe reduction is made.

Digitized by Google

The Compensating Valve is used in high speed service and is designed to reduce gradually the high brake cylinder pressure in an emergency application with 110 pounds in the brake pipe and auxiliary to 60 pounds, when the valve will close and allow no more air to escape through it from the cylinder.

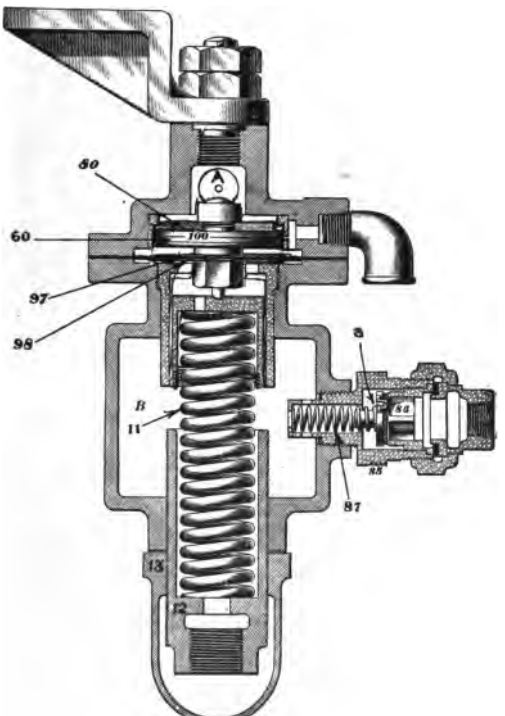

THE COMPENSATING VALVE

It consists of a piston, 100, that moves in a cylinder or bushing with several small ports in its side, in normal position the piston covers them so no air can pass out the

Digitized by Google

ports. Below this piston is a diaphram and plate fastened to the piston that prevents the passage of air either way. The piston is held up in normal position by a stiff spring 11, the tension of the spring is adjusted by the nut 12, a cap nut 13 makes an air tight joint at the bottom of the spring box, screwed into the side of the spring box is a check valve 85, containing a valve 86 with a small port *a* drilled through it.

The brake cylinder is connected above the piston at A; a connection is made to the check valve case 85 from the passage H in the side of the New York quick-action triple valve. At any application of the brake air from the cylinder comes into A and gives its pressure to the piston, if this pressure is any greater than the resistance of spring 11 piston 100 will move down and uncover the air ports in the side of the bushing; this allows cylinder air to escape and reduce its pressure till spring 11 has power to force piston 100 up and close the ports. A thin leather gasket on top of piston makes a tight joint against a shoulder of the bushing so no air can leak out till the piston moves down.

When an emergency action of the brake is made, brake pipe air from the quick-action triple comes through a pipe into the check case 85, forces valve 86 off its seat and equalizes in chamber B in the spring box. Spring 87 seats valve 86 so the air in B is confined there, but can gradually flow out through the small port *a* in the check valve. Its pressure comes against the diaphram under the piston and is added to the strength of spring 11, holding piston 100 up against a stronger pressure of the cylinder air than the spring alone could. This prevents the cylinder air from blowing out at this valve till the air in B has had time to escape and it then blows down slowly. In this manner it compensates for the change in braking power as the speed of the train reduces. This matter of a change in braking power with a change of speed has been discussed in the chapter on the High Speed Brake.

The port where the cylinder air enters the valve at A

Digitized by Google

is restricted so the air can not flash into A at a high pressure, which aids in graduating the flow of air from the cylinder during an emergency application when the 110 pound auxiliary pressure is used.

These openings are of different sizes for different sized brake cylinders to make the small ones blow down at the same rate of time with the large ones.

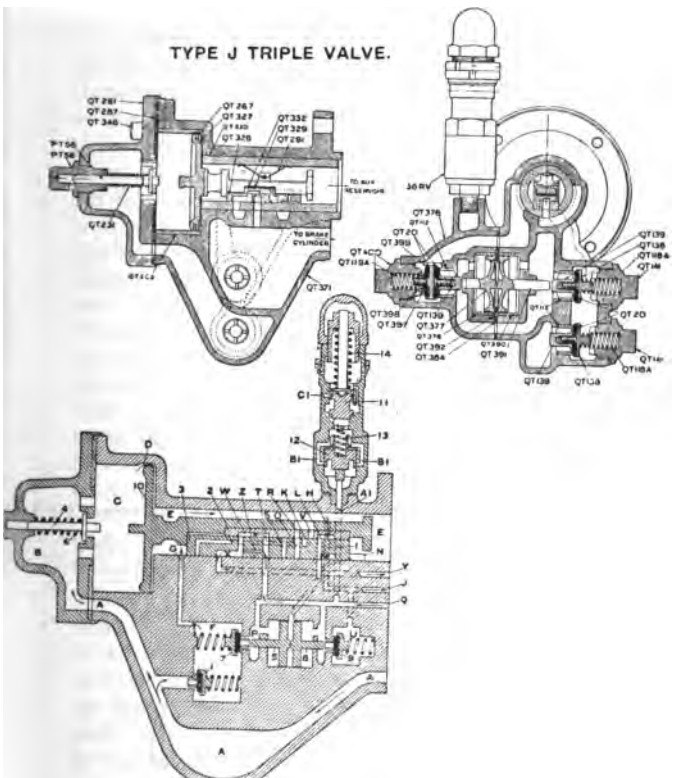

Full Release.

Digitized by Google

The type J triple here shown in two sectional views and a diagrammatic view is for high duty passenger service, it is both quick-action and quick-service and by the use of a supplementary reservoir of about twice the volume of the regular auxiliary reservoir; the quick recharge after a service application, a graduated release of the brake cylinder air and a high pressure at the emergency application are secured.

Referring to the diagrammatic view of the release and charging position, air from the brake pipe passes in the regular way around piston 10, through feed groove D into E and the auxiliary, brake pipe air also passes by check valve 1 (this valve is 139 in the sectional cut), into chamber F, then through port G into E, so the auxiliaries are charged from two sources. Port G is of the proper size for the reservoirs it is to charge, port D is small, it is for equalizing the pressures during slight fluctuations in brake pipe pressure. Port H through graduating valve 2 registers with port I through slide valve 3 and port J in the seat so the supplementary is charging at the same time with the service auxiliary. Air from the brake cylinder can pass out through ports Q, T, cavity W, ports X and Y. The safety valve is connected to the brake cylinder at port Q and is set at 60 pounds; the blow-down attachment that operates in an emergency application *only* is shown in the lower part of the safety valve.

In a quick-service application, piston 10 closes feed groove D, graduating valve 2 is moved back so cavity W no longer connects ports T and X, this closes the exhaust, port I is covered so no more air can pass to and from the supplementary, port R registers with S in valve 3, valve 3 next moves so ports G and K register as well as partly opening S to Q. Auxiliary air flows through R, S and Q to the cylinder; brake pipe air flows from chamber F in a small volume through G, K, L, M and N in between pistons 5 and 8; these pistons are not air tight so the air passes into Q without moving them, this

Digitized by Google

flow of air from the brake pipe makes a light local reduction that affects the *next* triple so it moves to service position quicker than with the brake valve reduction alone. When the reduction at the brake valve stops and piston 10 moves back to lap it moves valve 2 only and laps port S from the auxiliary and port K so no more air passes to the brake cylinder. In a full service with a short train valve 3 is moved far enough to lap ports G and K so no air comes from the brake pipe; ports S and Q are opened wide, thus a larger amount of air can pass from the auxiliary to the cylinder at each triple with a short train than with a long one.

In a restricted release, the brake pipe is recharged a few pounds above the auxiliary and the brake valve then lapped. Piston 10 will move both slide and graduating valves to release position, opening exhaust ports from Q around to Y; the recharging port G allows air to flow from the brake pipe; and ports J, H and I allow air to flow from the supplementary. This air from the supplementary will raise the pressure in E above that in C so piston 10 will move back closing port D, the graduating valve 2 will lap ports H and I so air can no longer flow from the supplementary and pressure in E will not rise higher, exhaust ports T and X are lapped by cavity W moving away from T. As main slide valve 3 will not be moved in this operation ports T and X will still register with Q and Y and air from the cylinder can pass out very slowly through the small port Z, connecting T and X, this allows air to exhaust from the cylinder slowly as long as valve 3 remains in this position. In the emergency application, piston 10 and valves 2 and 3 make a full travel at once, port Y is open to Q so that auxiliary air flashes into the cylinder through a large port, port N is uncovered by this movement of valve 3 so auxiliary air passes between pistons 5 and 8. Piston 5 moves to the left and opens emergency valve 7, brake pipe flashes into Q and the cylinder; piston 8 opens valve 9 so air from the supplementary in U can equalize through passage Q

Digitized by Google

with the cylinder and service auxiliary giving a much higher braking power than in the service application.

The Blow-down valve shown in the bottom of the safety valve case has moderate sized ports B1 around it so in a service application the air from the cylinder can pass around 12 without moving it. In an emergency application the air comes from Q so fast that it raises valve 12, makes a tight joint at its top edge, this prevents cylinder air getting to the safety valve during an emergency application. In operating the J triple to make a gradual release charge the brake pipe sufficient to move piston 10 and its valves to release position, then lap the brake valve, the brake will release slowly through port Z. To have it release faster, recharge the brake pipe again to move piston 10 and valve 2 then lap brake valve again, this will open exhaust port wide for a short time, you can thus release the brake by successive steps down to zero. See explanation of question 55.

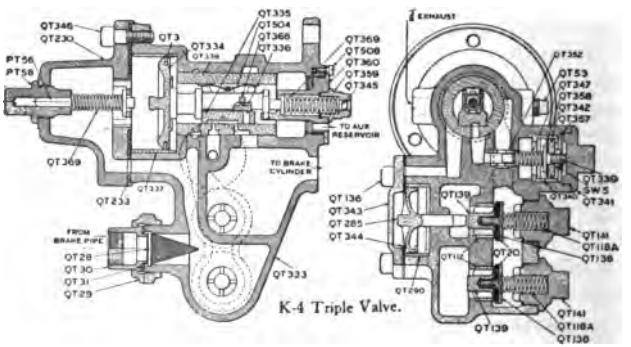

K-4 Triple Valve.

The K-4 Triple Valve of the New York Brake Co., in addition to the quick-action and quick-service features already explained in J Triple, has a piston stop 345 and its spring 369; an exhaust piston 339 that during a retarded release is moved to the left and chokes the exhaust port with its stem and thus restricts the exhaust. At a

Digitized by Google

release, if brake pipe pressure is raised much higher than the auxiliary, it forces triple piston 334 its full travel against the tension of piston stop spring 369, a port in slide valve then allows auxiliary air in at the right of exhaust piston 339 and force it to the left, its stem then chokes the exhaust opening so air passes out slowly. In this position piston 334 makes a tight joint against the bushing, no air will pass it and the auxiliary charges through the port from the brake pipe. When the auxiliary and brake pipe pressures are nearly equalized, spring 369 will move stop 345, triple piston 334 and its valves 335 and 336 back to free release position, this allows air to pass around piston 334 through feed groove, also opens the space at the right of exhaust piston 339 to the exhaust, so this piston is moved back by its spring 347, the exhaust port is then full sized. A leather gasket, 358, on the exhaust piston prevents a leak of auxiliary air past the piston while it is held in retarded release position. See explanation of question 54.

NEW YORK AIR SIGNAL VALVE

The Air Signal Valve shown in section on this page has two chambers, A and B, in the upper and lower parts of the valve, separated by a rubber diaphram 12. Air from the main reservoir reduced in pressure at the reducing valve to 40 pounds enters the signal valve from the signal pipe and passes into chamber A through the small opening *d* which serves to restrict the flow of air into and out of chamber A. From A air passes up around the posts 9 which are firmly attached to the diaphram stem 7. Air also passes through the opening *a* in stem 7, and through the very small hole at *b* into chamber B. The lower end of stem 7, when in its normal position, makes a tight joint on the top of post 4 around the plug 5, so that all air has to pass through *b* when charging up chamber B. After the signal equipment is charged to

Digitized by Google

the standard pressure, a sudden reduction of pressure in the signal pipe by allowing air to escape at the car discharge valve will also reduce the pressure in chamber A. The air in B cannot equalize through *b* fast enough; so

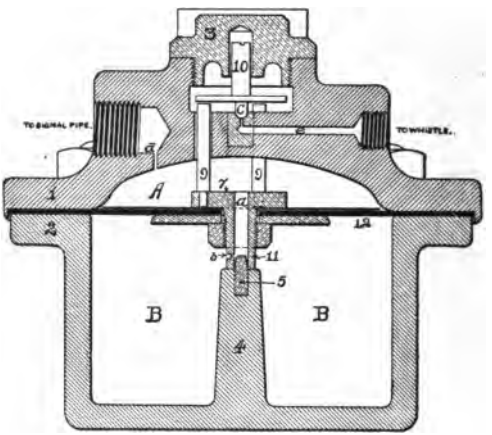

SIGNAL VALVE 1903 MODEL.

pressure in B will raise diaphram 12, also raising disc valve 10 off its seat at *c;* air then passes from A to the whistle through *e* and gives a blast. When diaphram 12 raises, the lower end of stem 7 at 11 raises off the post 4, air from chamber B can then pass up through 11 past plug 5, which is taper at its upper end, through passage *a* in stem 7 and equalize quickly with the air in chamber A. The diaphram at once drops to its normal position with stem 7 resting on post 4, seating valve 10 so no more air passes into the whistle. Air then feeds into A and B till the pressures are equalized with the signal pipe, when another reduction can be made at the car discharge valve and again operate the signal valve.

The older type of New York Signal Valve is constructed like the 1903 model, except that the opening *a* passing through diaphram stem 7 is very small, and air

Digitized by Google

passes through *a* slowly when charging up B and out of chamber B much slower when the pressure in A is reduced and diaphram 12 rises; this causes diaphram to remain up and hold valve 10 open longer than necessary.

REDUCING VALVE.

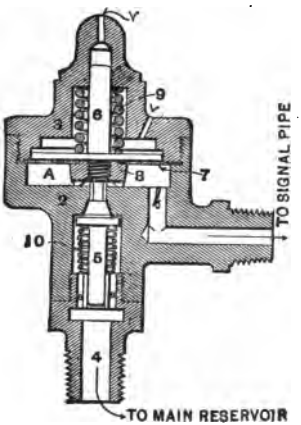

The disc valve 10 and chamber A are the same in both types of signal valves; the bottom part, chamber B is much larger in the 1903 model than the older type, so there is a larger volume of air in chamber B of the 1903 valve.

The 1903 model charges up chamber B slowly; when diaphram 12 raises, air equalizes from B into A very quickly, thus giving a quick closing of disc valve 10.

The reducing valve used with the New York signal apparatus is shown in section. Diaphram plate 6 is held down by a regulating spring 9 when there is less than standard pressure in A. This in turn holds supply valve 5 off its seat so that main reservoir air entering at 4 can pass into A and through *b* into the signal pipe, charging it. A rubber diaphram 7 makes an air tight partition between the air in A and the outside air. The small

Digitized by Google

holes *v* in the spring cap 3 are to allow any air that may leak past 7 to escape to the atmosphere. When the pressure in A reaches the standard amount, usually 40 pounds, diaphram 7, stem 6 and nut 8 are raised by the air pressure against the stiffness of spring 9. This allows spring 10 to close supply valve 5 so that pressure in A will not raise any higher. When the opening of a car discharge valve or a leak in the signal pipe or its connections reduces the air pressure, spring 9 forces the diaphram down, opens the supply valve; this allows main reservoir air to feed into the signal pipe again.

The object of a reducing valve is to maintain signal pipe pressure lower than that used in the operations of the brake, so that operating either the brake or signal will not interfere with the work of the other. The opening past the supply valve is made small so air will pass into the signal pipe slowly in order that a sufficient reduction can be made at the car discharge valve of any car to operate the signal valve. This could not be done if the reducing valve supplied air as fast as the car discharge valve took it out.

OPERATING THE EQUIPMENT

When making the initial or first service reduction in brake pipe pressure, to apply the brakes lightly on a train having both kinds of triple valves in operation, no change in the manner or amount of reduction is needed, as both Westinghouse and New York triples, if in good order, will apply their brakes alike. The initial reduction should be from 5 to 7 pounds, depending on the number of air brake cars operated; the length of the entire train and the speed at which it is running. A short train will not need so heavy an initial reduction as a longer train. There will not be so many triple valve feed ports to pass air from the auxiliaries to the brake pipe, which tends to prevent movement of the triple piston, and the volume

Digitized by Google

of brake pipe air is less in a short train than in a long one; so the reduction through the brake valve is made quicker, which moves the triples quicker. This in turn passes air into the brake cylinders faster, so the pistons move over the leakage grooves with less loss of air through the grooves.

On a long train the first reduction may be 7 to 9 pounds without giving serious shocks, unless the speed is very slow, in which case it is best to make a lighter reduction. A 5 pound initial reduction will give a cylinder pressure of less than 5 pounds on an 8-inch travel piston with the ordinary triple valves, which will not give any shock to a train. With K triples in the train a 5 pound reduction will give a higher cylinder pressure in their cylinders. If the train is moving fast, the initial reduction can be much heavier; especially in the case of a passenger train. It is advisable to apply the brakes with considerable force when at high speed, the retarding force of the shoes on the wheels is less in proportion than at slow speeds.

With freight trains, at whatever speed, allow the slack to even up after shutting off steam before applying the brake, then apply it lightly in the case of slow speeds to bunch the train evenly and follow up with other reductions as may be necessary to control the train. Always wait at one reduction till the air has stopped flowing from the brake pipe exhaust of the brake valve and the triples have had a chance to act and the slack to even up before making another reduction.

When operating the 1902 model New York brake valve, move the handle to first service position notch with a short train, and the air will at once begin to discharge from the brake pipe through an opening in the main slide valve, as the pressure reduces, the cut-off valve will close the opening, it will entirely close when the pressure is reduced the proper amount for that notch; it is not necessary to return the handle to lap position. Succeeding reductions may then be made by moving the handle to the next service notches and allowing the valve to graduate the flow

Digitized by Google

of brake pipe air and stop its discharge, or the handle can be stopped between the notches. When the last graduating notch is reached it is expected that a reduction of 20 to 23 pounds will have been made in the brake pipe pressure. With a long train it may be necessary to go to the second or third notch in order to get a proper initial reduction on a long train. If quick action is desired at the triples, move the handle to the emergency position for the first reduction and leave it there till the train has stopped or the necessity for the quick stop has passed. This is a general rule for *all* brake valves and *all* triples in cases of emergency or danger which must be observed.

With the older type of New York brake valve, the Vaughn-McKee valve, in order to have the valve cut off the discharge of brake pipe air automatically in a graduated application, the valve must have been placed in full release position long enough to discharge all air from the supplementary reservoir to allow brake pipe pressure to move the equalizing piston and the cut-off valve to their normal positions. It must then be moved to running position to recharge the supplementary reservoir from the brake pipe air till it equalizes, after which the piston would operate the cut-off valve in a graduated application. If the valve was only placed on running position to release brakes and moved to service application, the cut-off valve might be over the graduated reduction port so no air could pass out of brake pipe and it would be necessary to go farther back towards the emergency notch to discharge any brake pipe air. When operating the brake with this valve be sure to go to full release when releasing brakes, then stop on running position an instant if you expect the piston to operate the cut-off valve in a graduated service reduction. The 1902 model brake valve will graduate the flow of brake pipe air in a service application, as it automatically discharges and recharges the supplementary reservoir when at lap position or towards release. As the only proper position for the brake valve at the moment of releasing all brakes on any

Digitized by Google

kind of a train or engine is full release, this precaution can be observed.

With a short train or lone engine the brake valve of whatever type can be moved from full release to running position in a few seconds and thus avoid overcharging the brake pipe in case there is a high main reservoir pressure.

With a long brake pipe, leave the valve in full release about a half second for each car or until the black and red hands of the gauge have equalized at less than the standard brake pipe pressure, usually 70 pounds, then move to running position and leave it there till the next application, unless the train is a very long one, when it is not unusual for a few of the brakes on the head end of the train to apply from overcharged auxiliaries, the head ones charging higher than those on the rear when main reservoir air is flowing rapidly into the brake pipe. If any set, they can be kicked off by going to full release for an instant. The New York brake valve has an excess valve to maintain a difference of pressure between the main reservoir and brake pipe so the instructions about carrying excess pressure with the Westinghouse D-8 brake valve, found in the previous pages of this book, will apply to the New York brake valve. Questions 19 and 65 refer to this matter. Always use full release position to release brakes with any valve, and it is a vital point in quick recharging of auxiliaries, as when on a hill, to keep the valve in full release as long as possible.

Many railroads have imperative, iron-clad rules about certain air brake work which are made to prevent careless or unskillful air brakemen from doing considerable damage. While only a very few of the men handling the brake may be in the class mentioned, yet the rule must be observed by the skillful as well as the careless ones. One of these rules is: "Do not release the brakes on a long train when running at a slow speed, but come to a full stop first." This speed is usually below eight miles an hour. This rule is made because the shocks to the train caused by the slack running in or out of the train

Digitized by Google

quicker than all the brakes can release, is usually certain to break the train in two or more parts. With the use of an additional engine and tender brake, either the Straight Air or the ET brake; retaining valves on engine and tender brakes or cocks so arranged as to hold the engine and tender brakes applied, or sufficient K triples at the head end, the train brake can be released at a slow speed without serious shocks. Retainers depend on tight piston packing and tight joints for their value. If the joints or packing leathers leak, retainers are useless for this purpose. This "iron-clad rule" applies as well to long passenger trains, when consisting of over twelve coaches, a release at slow speed without the use of some device on the engine to hold the slack is almost certain to break the train in two parts. The size of the main reservoir and amount of excess pressure have considerable to do with the ease and certainty of releasing all brakes quickly on a long train; large volume and high excess make the operation sure on a long train. You should remember that there is more difference in the reservoir and brake pipe pressures after a 20-pound reduction than after a 5-pound reduction. This may explain the reason for stuck brakes on a long train after a light application. This matter is treated of in questions 12, 61 and 108. One prominent railroad handling long trains of air braked ore cars allows the release of a few brakes at a time when running at a slow speed, instead of coming to a full stop. After a full application or nearly so, when necessary to release a few of the brakes at a time and allow the train to keep moving during releasing, the brake valve is moved from lap to running position for an instant to raise the brake pipe pressure a very little, not over a pound, when a few brakes, usually those near the head end of the train will release. The next time the valve is placed in running position for an instant, brakes will release in various parts of the train; this operation can be repeated till the brake pipe pressure is raised about 5 pounds in all. Between each release allow the slack to even up. If this

Digitized by Google

work is skillfully done and the triples are in good order, very few brakes will remain applied after the 5-pound raise in pressure. Then with good stiff excess go to full release and quickly charge the brake pipe up its entire length to ensure that all triples are moved to release position. This process has a much different effect on a train at slow speed from releasing all triples with the same recharge of brake pipe. It also operates better on a train of ore cars which are either all loaded or all empty, than on an ordinary freight train having loads and empties mixed up in the train; for this reason it takes great skill to handle a freight train in this manner. A full release of all triples from one movement of the brake valve at slow speed, usually breaks the train in two; for that reason all roads condemn the practice. In releasing brakes an engineer should know the grades and how they affect the bunching or stretching of a train.

One of the questions usually asked in an air brake examination is "trace the air through the air brake system; tell where it goes and how it operates the various parts of the equipment." Some air brake instructors ask this question at the beginning of their examination. As a complete answer to this question requires a good knowledge of the entire equipment, in this book it is left till the last.

With the Westinghouse equipment, air from the atmosphere enters at the inlet or receiving valves of the air pump, when the piston moves in the air cylinder, filling the space left by the piston. As the piston makes a stroke the air in the cylinder that is compressed passes by the discharge valves into the main reservoir and from there to the brake valve, where it is above the rotary valve. In full release position it passes through the direct supply port in rotary into the pocket in the rotary seat, around the partition, up into the large cavity in the lower side of the rotary, then into the brake pipe. At the same time it passes through the feed port in the rotary and the preliminary exhaust port into chamber D also through th-

Digitized by Google

equalizing port into chamber D; main reservoir air goes to red hand of the duplex gage and pump governor and warning port to atmosphere. From chamber D, air goes to the black hand of gage.

In running position air passes through the running position or feed port into the feed valve and, until the supply valve closes, on into the brake pipe. In this position air passes from the brake pipe up into the cavity in the rotary and then to chamber D through the equalizing port. With the D-8 or 1899 valve in running position air passes through feed port in rotary to the excess valve; by the excess valve into brake pipe. With D-8 valve brake pipe air goes to the governor, with the other valves, main reservoir air operates the governor. When the governor operates air flows past the diaphram valve in over the air piston and some air passes out the vent port.

The air in chamber D flows into the brake valve reservoir with all types of brake valve. Brake pipe air flows back until it reaches an angle cock or stop cock that is closed. It flows into every triple valve that is cut in and connected to the brake pipe, pressing against the bottom or brake pipe side of the triple piston. When this piston is in release position air flows through the feed groove around the triple piston into the auxiliary reservoir till the pressures are equalized. Air also passes up the pipe to the conductor's valve. When the pressures in the brake pipe and auxiliary have equalized at 70 pounds the brake is ready for an application; we will explain a service application first.

Moving the handle of the rotary to service position first laps the port that admits main reservoir air to the brake pipe, closes the equalizing port between chamber D and the brake pipe and opens the preliminary exhaust port so chamber D air escapes to the atmosphere. This reduces chamber D pressure over the equalizing piston brake pipe pressure then raises this piston, which opens the brake pipe exhaust valve so brake pipe air flows to the atmosphere, reducing the pressure at each triple valve. The triple

Digitized by Google

piston moves towards the reducing pressure, closing the feed port, moving the graduating valve to open its port in the slide valve, the slide valve moves so the exhaust port is closed, next opening the air port to the brake cylinder so that auxiliary air flows into the brake cylinder and pushes out the brake piston which sets the brake. See question 37 for the Operation of the Distributing Valve.

To release the brake, the brake valve is placed in full release position; main reservoir air passes into the brake pipe as already described. This moves the triple valves to release position, closing the air ports to the brake cylinder, opening the exhaust port so the air can flow from the cylinder to the atmosphere and opening the feed groove so brake pipe air can flow into the auxiliary. Air also flows into chamber D and brake valve reservoir.

To release the ET brake the brake valve must be in running position, or the independent valve in release position.

If a retaining valve is used, brake cylinder air, after leaving the exhaust port, passes through a pipe to the retainer, when this valve is in release position the air passes directly out. If the valve is in retaining position air pressure raises the valve and passes up into the case of the retainer and then out through the small opening in the case till the pressure drops to 15 pounds, when the valve seats and holds the air in the brake cylinder till the retainer is turned to release position.

When making an emergency application of the brake the brake valve is placed in emergency position. Brake pipe air passes out very rapidly through the direct exhaust port at the same time chamber D air passes out at the preliminary exhaust port of the automatic brake valve. Air passes out of the brake pipe so rapidly that the triple valve cannot reduce auxiliary pressure as shown in service application, auxiliary air pressure moves the piston full stroke at once, auxiliary air passes by the removed corner of the slide valve through emergency port and on top of the emergency piston, pushing it down, this opens the

Digitized by Google

emergency valve and allows brake pipe air to pass into the brake cylinder, which sudden reduction of brake pipe pressure operates the next triple quick-action and so on throughout the whole train. At the same time auxiliary air passes through the tail port in the slide valve; also some air passes by the emergency piston into brake cylinder till the pressures equalize. When the brake is set by opening the conductor's valve or by the train breaking in two, the operation is the same.

In releasing brakes after an emergency application, the flow of air is the same as with a service application. We will add to this answer the signal equipment: The main reservoir air flows through the reducing valve till it reaches a pressure of 45 pounds; if the reducing valve is adjusted for that pressure. Air flows into the air signal pipe back to each car discharge valve. On the engine it passes from the signal pipe into the upper part of the signal valve, over the rubber diaphram into A, it also passes down to the lower part of the valve, up by the stem 10 slowly into chamber B until the pressure equalizes there with the signal pipe. When the whistle is to be operated from the train, the car discharge valve on the car is opened, air passes out of the signal pipe to the atmosphere. This reduces signal pipe pressure, when the reduction affects the pressure over the diaphram in the signal valve, the pressure under the diaphram not being reduced so quickly, air under it in B raises the diaphram and with it the valve 10, so that air flows out there to the whistle, giving a blast. When the valve 10 is raised, air in B flows past the flattened sides of this stem to the whistle; this quickly reduces the pressure in B and the diaphram drops, pushing valve 10 to its seat so no more air passes to the whistle. As soon as the brake pipe pressure falls below 45 pounds the reducing valve opens and begins to feed main reservoir air into the signal pipe slowly, as the opening through the valve is restricted or choked. If the air could pass into the signal pipe at the reducing valve as fast as it can pass out at a car discharge

Digitized by Google

valve, no reduction would be made in the signal pipe pressure.

With the New York brake, the course of the air is a little different. Air flows from the atmosphere through the receiving valves into the air cylinders as the air pistons move up and down. The air in the high pressure air cylinder goes direct to the main reservoir when it is compressed. The air in the low pressure air cylinder, when compressed, passes into the high pressure air cylinder and from there into the main reservoir, thence to the brake valve around and on top of the main slide valve; main reservoir air goes to the red hand of the gage and brake pipe air to the black hand. If a single governor is used it is operated by brake pipe air, if a duplex governor one side by brake pipe air and the other by main reservoir air. When in release position it passes directly into the brake pipe and from the brake pipe into chamber D and the supplementary reservoir with the 1902 model valve. With the old style brake valve on release position the air in the supplementary reservoir and chamber D passes out through a small cavity in the slide valve to the atmosphere; this allows brake pipe pressure to move the equalizing piston to its normal position. On running position the main reservoir air passes by the excess valve and then into the brake pipe; brake pipe air passes into the supplementary reservoir with the brake valve in this position.

The brake pipe air passes back through the brake pipe to each triple valve that is cut in. At the triple valve the air passes through the port F in the vent valve piston and if the main piston is not already in release position, moves it there. Air then passes through the feed groove into the auxiliary until the pressure there has equalized with the brake pipe. With the Automatic Control Valve the course of air is explained at the operation of that valve.

With a service application, the slide valve in the brake

Digitized by Google

valve is moved till the service port is open, brake pipe air then flows direct to the atmosphere until its pressure is reduced so the pressure of the air in the supplementary reservoir can move the piston, closing the cut-off valve and stopping the escape of brake pipe air.

This reduction of brake pipe pressure extends to each triple, auxiliary air pressure moves the triple piston, graduating valve and slide valve; first closing the feed groove, next the exhaust port and then opening the air port so air passes from the auxiliary to the cylinder. The air in the space G, between the main triple piston and the vent valve piston passes out through port F so the vent valve piston does not move in a service application.

In an emergency application the slide valve in the *brake valve* is moved to emergency position. Brake pipe air passes rapidly out through the large ports in the slide valve, reducing brake pipe pressure so rapidly that the triple pistons make a quick stroke. As the air between the two pistons cannot pass through port F quickly enough, the vent valve piston moves with the main piston, unseats the vent valve; this allows brake pipe air to flow to the atmosphere. The air also pushes against the quick action piston, moving it over and with it opens the quick-action valve, which permits auxiliary air to flow through the passages into the cylinder, the check valve preventing this air from flowing back from the cylinder. Auxiliary air also flows into brake cylinder through the service port at the graduating valve. In releasing the brake the flow of air has already been described.

The course of air through the signal equipment is the same as described with Westinghouse signal, except that air passes from chamber A to chamber B through a small port *b* when charging up the signal valve, and out of B around the plug 4 to chamber A, when the signal valve operates.

Digitized by Google

AIR BRAKE EXAMINATION QUESTIONS

1. What are the essential parts of the automatic brake? What does each part do?

2. Can you trace the course of the steam through the steam end of the air pump? Can you trace the course of the air through the pump?

3. How should the pump be started and lubricated?

4. If the pump stops after working good for a time, where is the trouble likely to be?

5. If it makes a quick stroke one way and a slow stroke the other, where is the trouble likely to be?

6. What are the principal causes for a pump running hot?

7. If the main reservoir is partly filled with water, which will it affect the most, setting or releasing the brake? Why? How often should it be drained?

8. What might prevent the governor shutting off the steam and stopping the pump when maximum pressure is obtained?

9. Where would you look for the trouble if governor stops the pump at much less than standard pressure?

10. How do you adjust the governor with the ET brake?

11. Should you test the engine and tender equipment for leaks?

12. How do you test for leaks in main reservoir and pipes from pump to brake valve?

13. What other parts of the equipment gets air from the main reservoir besides the brake pipe?

14. How do you test for a leak in brake pipe? In signal line?

15. How do you locate a leak that lets off the brake?

16. What pressure should you have before testing?

17. What controls the excess pressure with the H-5 and H-6 brake valve? With the F-6 valve? With the New York brake valve?

Digitized by Google

18. How many kinds of engineer's brake valves have we in service on this road?

19. Can you trace the air through each of them?

20. Explain the principle of operation of the engineer's equalizing discharge brake valve.

21. Describe its operation to apply the brake with service or emergency applications, and in releasing the brake.

22. Why is excess pressure necessary? Do you need the most with a large main reservoir or a small one?

23. Is more excess needed to release all the brakes on a long train than on a short one?

24. How do you regulate the excess pressure with the H type brake valve? With the 1892 model or F-6 valve?

25. Name the different positions of the brake valve. What extra position has the type H brake valve?

26. What ports are open and what ports are closed in each position?

27. Where does main reservoir pressure begin and end?

28. Where does brake pipe pressure begin and end?

29. Where does auxiliary pressure begin?

30. What is the equalizing port for? Is it open in all positions of the brake valve?

31. Do leaks in the brake valve affect the operation of the brakes? Explain how.

32. Do you consider a cut rotary valve or seat dangerous?

33. Will using the valve in emergency instead of service application cause this cutting any quicker? Why?

34. What is the purpose of the small reservoir connected to the equalizing discharge valve?

35. If the pipe leading from valve to small reservoir is broken off or leaking badly, what will you do?

36. Where is the first air taken from in making a service stop? What port does it blow out of?

37. Where does it come from? Where next?

Digitized by Google

38. Does air ever blow out of brake pipe exhaust when releasing the brake? Why?

39. Do you hear it when releasing brake on engine and tender only? Do you hear it with a train of over two cars? Do you hear it with the H type?

40. If you are connected to more than two air cars and heard that blow, what would it indicate?

41. How do you know that the brake valve is working properly?

42. When applying the brakes can you tell about how many cars are connected with air to the brake valve by the amount of air escaping from the brake pipe exhaust? How do you make this test?

43. How much do you reduce the brake pipe pressure from 70 pounds to set the brake as tight as possible?

44. Why will this reduction do that?

45. What is the difference between a reduction and an application?

46. Does the length of travel of brake piston have anything to do with the pressure when brake is full set? How? Explain fully.

47. In making a service stop why should the brake valve not be moved past the service application position?

48. Is this movement of the brake valve liable to kick off some of the head brakes? Why?

49. What is the proper position to place brake valve in after releasing brakes if they are to be set again immediately? Why? Explain fully.

50. What are the functions or uses of the triple valve?

51. How many forms in use on this road? Describe each form.

52. Where does all the air come from that enters the brake cylinder through the plain triple when setting the brake?

53. Does all the air that goes into the brake cylinder of a quick-acting brake come from the auxiliary?

54. Please explain the action of the quick-action triple when used in the emergency application.

Digitized by Google

55. Can you get the emergency action after a service application?

56. Does it take a sudden reduction of pressure right at the triple to work the quick-action valves or will a slow, heavy reduction do this? Why?

57. If three or four cars at the head end of the train do not have quick-action triples working, can you get the emergency application behind these cars by a reduction at the brake valve? How many cars will the quick-action "jump over?"

58. What is the function of the graduating valve?

59. Where is it located and how does it operate?

60. If the graduating valve leaks on its seat, is the brake connected to that triple liable to release on a partial application? On a full application? Why is this?

61. What is the function of the graduating stem and spring?

62. If this spring is very weak or missing, how will it affect the work of the triple valve?

63. How does the air get from the brake pipe into the auxiliary with the ordinary triple? With the K type?

64. Why is this port so small? Could the brakes be set and released as certainly on a long train if this port was much larger? Would auxiliaries charge evenly?

65. In what position of the triple valve is the port open?

66. How rapidly does an empty auxiliary charge up to 70 pounds with 70 in the brake pipe?

67. How rapidly from 50 pounds up to 70 pounds?

68. What regulates the time of charging each different sized auxiliary?

69. If one auxiliary is charged up higher than another is the brake likely to creep on? Is it liable to take place when coupling up an air brake train? Explain why.

70. Why is it dangerous to apply and release the brake repeatedly in making one station stop?

71. Does this apply to a release and second applica-

Digitized by Google

tion at a slow speed on slippery track? With a passenger train? With a freight train?

72. Do you understand that brake cylinders have leakage grooves? Where are they located and how long are they? What are they for?

73. Do you allow for them when setting the brake? How?

74. As a rule how much reduction in brake pipe pressure is necessary to ensure that brake piston goes past the leakage groove?

75. Does a long train require more than a short train? Why?

76. What should be done after coupling to an air brake train before pulling out?

77. What pressure should you have in brake pipe and auxiliaries before testing the brake?

78. How do you know when you have 70 pounds in the auxiliaries?

79. What tests of air equipment are called for by our rules? Explain fully how these tests should be made.

80. Are you required to test retaining valves? How is this done?

81. If a brake is broken or disabled, how will you prevent it working on that car and let the brakes work on other cars?

82. How do you cut out the brake on engine or tender?

83. Is it necessary to release the brake before cutting it out?

84. How does the length of the piston travel affect the work of the brake? If it is too long? If it is too short?

85. What is the proper piston travel? For passenger cars? For freight cars? For engine brakes?

86. How is the slack taken up to secure this adjustment?

87. Should the triple be cut out before adjusting the levers to avoid injury to the workman in case brake goes on?

Digitized by Google

88. At what travel should the driver brake piston be adjusted? How is the slack of a six-wheel brake taken up?

89. What is necessary in order to have all the brakes work alike?

90. When brakes go on suddenly and are not operated by the engineer, what should you do? To what causes would you assign this?

91. If an air brake train breaks in two, how do you proceed to get train ready to go ahead again? How do you proceed in case of a bursted hose? How can you help trainmen to locate it?

92. Would it be necessary in these cases to make a terminal test?

93. If, after releasing train brake there is a steady leak from the exhaust port of the triple, what is the trouble?

94. What precautions must be observed in making a stop with a "part air" freight train? What with a long, "full air" train?

95. In making a stop with a freight train, when would you let off the brakes to make a smooth stop? Why?

96. When with a passenger train? Why?

97. What is the pressure retaining valve, what is its use and how is it operated? Are there several kinds?

98. How many pounds of air is it intended to close up on and hold in the brake cylinder?

99. Does the brake release any slower till it gets down to this pressure, and how is it done?

100. Can you get the emergency action of the brake with the pressure retainers holding 15 pounds?

101. In descending a grade, how can you best keep a train under control?

102. When two or more engines are coupled together, which engineer should do the braking? Why?

103. How will you proceed to give the leading engineer complete control of the train? What should the second engineer do?

Digitized by Google

104. If there is no cut-out cock on second engine under the brake valve, what should be done?

105. How does the air signal equipment operate?

106. What pressure should be carried in the signal line? How do you know you have this pressure?

107. What causes the whistle to blow each time the brake is released? What makes it repeat the signal?

108. Will a leak in the train signal pipe affect the working of the whistle? Explain.

109. Explain the meaning of the signals given by one, two, three and four blasts of the signal whistle.

110. What changes do you make in the engine equipment to carry 110 pounds brake pipe pressure instead of 70, for the high speed brake? For the type L triples?

111. How many pounds brake pipe reduction in a service application will give a fully applied high speed brake?

112. Is it safe to use the emergency application of the high speed brake when running less than thirty miles an hour? Why.

113. Explain the action of the high speed reducing valve in service, and in emergency.

114. What pressures should be in the brake cylinders on the engine and tender when the Straight Air brake is fully applied?

115. How is this pressure regulated?

116. Does long piston travel have any effect in reducing this pressure?

117. What valve closes the exhaust from the brake cylinder to the triple when the Straight Air is applied, and vice versa? Explain its operation.

118. Is it good practice to use the automatic while the Straight Air is full set on the engine and tender brake? Why?

119. Should the Straight Air brake valve be left on lap position while operating the automatic? Why?

120. How many air pipe connections at the Distribut-

Digitized by Google

ing valve? Explain where the air comes from and goes to at each of these connections.

121. How many pipe connections at the H-5 brake valve? How many with the H-6? Where does the air come from and go to at each one?

122. Explain the effect of leaks from each of these pipes and tell what you would do in each case, if any of them break off. How do you locate these leaks?

123. What is the duty of the equalizing piston and its slide valves in the Distributing valve, and what air pressures operate it?

124. What is the duty of the application piston and its valves and what air pressures operate it?

125. Why does the engine brake creep on when either brake valve is lapped? How will you locate this defect?

126. Will the engine brake stay applied if both brake valves are in running position? Why? Will it creep on from leaks?

127. Which brake valve is used to apply the automatic brake on train and engine? Which brake valve should be used to operate the engine brake only?

128. What is the difference in the operation of the engine brake by the Independent brake valve and by the Straight Air brake valve?

129. Does the safety valve on the Distributing valve control the application chamber pressure when the Independent brake valve is used? Or in an automatic application only? Any difference between No. 5 and No. 6 ET?

130. What valve regulates the brake cylinder pressure in a full application by the Independent brake valve?

131. Explain the operation of the excess pressure side of the duplex pump governor. How do you set it?

132. Is it necessary to move the New York brake valve to *positive lap* position at a brake pipe reduction. or should the valve be allowed to move itself to *automatic lap?* Why?

133. Trace the course of the brake pipe air in the Westinghouse quick-action triple in release, service and

Digitized by Google

emergency positions. Also do the same for the New York quick-action triple valve.

134. Explain the retarded release of the K type triple.

135. Explain the operation of the Westinghouse L type triple?

136. Explain the operation of the New York Automatic Control brake.

Digitized by Google

INDEX

PAGE

Air Pump—8-inch 24-25-26
Air Pump—9½-inch .....26 to 30
Air Pump—11-inch 31
Air Pump—Cross-Compound 37-38-39
Air Pump—New York Duplex.....192 to 199
Accelerator valve—New York brake.....222
Air Signal—Westinghouse 146-157
Air Signal—New York .....247 to 250
Auxiliary reservoir 22-47-107-136-189
Automatic slack adjuster.....174 to 176
Air cylinder lubricator 31
Automatic control—New York brake.....225 to 231
B-6 feed valve 62
B-3 brake valve—New York brake.....214 to 219
Brakes leaking off 22-69-125-156-158
Brakes creeping on 129
Brakes sticking 127-159-254
Bursted hose 143
Brake pipe pressure 22-64
Breaking in two 144
Brake leverage .....21-177 to 185
Charging auxiliaries 6-21-22-136
Cutting out brakes 139-154
Calculating air pressures.....186 to 190
Compensating valve—New York brake.....241
Definitions 23
Distributing valve—No. 5.....78
Distributing valve—No. 6.....92
Defective air pump.....33 to 36-198
Defective brake valve.....69-72-125-208
Defective brake 128-130-154-158-159
Defective governor 42-43
Defective triple valve.....17-113 to 115-154-239
Defective brake pipe.....133
Defective piston packing 33-35-156
Defective air signal 147-149-157
Double heading 98-142
E. T. equipment—No. 5.....73 to 81
E. T. equipment—No. 6.....84 to 100
Equalizing discharge brake valve.....11-55 to 69
Equalizing reservoir 22-56-69-189
Excess pressure 52-53
Emergency application .....14 to 17-109-260
Equalization 5-18-19-186-188
Examination questions .....261 to 269
F-6 brake valve .....54 to 56

Digitized by Google

PAGE
F-6 feed valve 58
Full application 10-23-107
Governor .....41 to 46-200-202
G-6 feed valve 60-61
Graduating valve 7-106-113-233
Graduated application 106-113-233
H-5 brake valve 73
H-6 brake valve 87
Handling trains on grades 141
High speed brake .....163 to 171
High pressure control 172
Independent brake valve 77-90
Inspection of brake equipment 21-48-134-135-153
J triple valve—New York brake 243
K type triple valve 116-118-251
L type triple valve .....119 to 124
Leakage groove 22-106-137
Leaks in brake pipe 50-129-158
Leaks in brake cylinder 22-126-156
Leaks in triple valve 125-154-259
Leaks in brake valve 69-72-125-208
Leaky brake pipe check valve 125
New York brake valve—1902 model 251
Operating the equipment .....21-251 to 255
Overcharging the brake pipe 19-127-130
Plain triple valve 5-6-7-108-139-154
Pressure retaining valve 144-152
Position of brake valve .....11-63 to 69-73-75-104-105
Piston travel 18-22-138-155
Pressure on brake piston 18-105-107-138-187-188
Quick action triple valve—Westinghouse..15-18-108 to 114
Quick action triple valve—New York 231
Quick service triple valve 115-119
Releasing brakes 9-131-254-257
Reducing valve 62-148-211-249
Straight air brake .....101 to 104-209
Slide valve feed valve .....60 to 63
Service application 7-23-107-206-233-251
Safety valve 85-169-172
Slack adjuster .....174 to 176
Testing for leaks 49-72-100-125-208-239
Testing air signal 147-157
Testing brake valve 69-72-125-208
Testing the brakes 20-125-134-153
Two-application stop 19-132
Trainmen's questions 150
Tracing the air 255
Water raising system .....160 to 162

Digitized by Google

MITCHELL'S MODELS

Are a series of cardboard models or charts, printed, colored and cut so clearly as to show the perfect and defective action of brake valves, triple valves, governors, etc. The relation existing between different parts, passages and pieces of the apparatus is clearly shown and the function of each is explained in clear, simple langauge so that after a little study the course of the air can be readily traced.

No engineer, fireman, trainman, or person desiring to qualify for air brake examination can afford to be without a set of Mitchell's Air-Brake Models. They insure your getting the necessary knowledge with least expenditure of time and labor.

For further information write for free illustrated circular of Mitchell's Models, containing also valuable air-brake information.

International Correspondence Schools

Box 1221, Scranton, Pennsylvania

Digitized by Google

GRAPHITE

Dixon's Flake Graphite Lubricants

They are the standard for economical, positive and efficient lubrication.

Dixon's Graphite Pipe-Joint Compound

For all threaded connections, insuring a tight fit and a joint that can be taken apart without damage.

Dixon's Graphite Engine Front Finish

Its brilliancy is unaffected by the elements.

WRITE FOR LITERATURE ON THE ABOVE

JOSEPH DIXON CRUCIBLE COMPANY

JERSEY CITY, N. J.

——THE——

Traveling Engineers Association

At their annual meetings each year since 1893 have had carefully prepared Committee Reports on a great number of practical questions concerning the operation of the locomotive and its various attachments like the lubricator, injector, and air brake, as well as the proper handling of trains. The Committee Reports, together with the discussion thereon by the members of the Association, are printed for distribution to others who wish to inform themselves on these important topics. Copies of these Reports are on sale at the office of the secretary. Price 50 cents for paper bound; $1 for leather covers. Reports for the meetings previous to 1900 are all gone. Address,

W. O. THOMPSON, Secretary,

N. Y. C. Car Shops

EAST BUFFALO, N. Y.

Digitized by Google

Chicago Locomotive Lubricator

Class "C"

3-Feeds with Solid Sight Feed Glasses

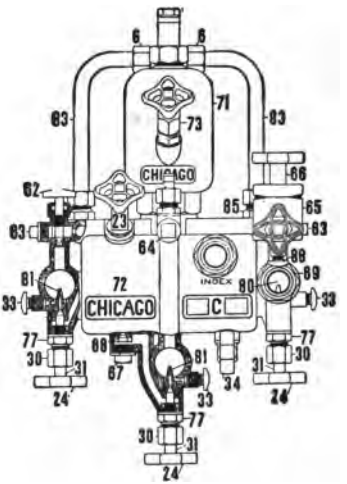

To Operate

Open steam valve full at boiler. Open valve 62 one turn. Open water valve 73 three turns. Note the feed glasses to see if filled with water. After the glasses are filled with water regulate feed with valve 31.

The auxiliary oil cup 65, close pressure valve 62. See that valve 78 is closed. Open auxiliary drain valve 88 to free cup of water. Open auxiliary filler plug 66 and fill. After cup is filled, open feed valve 78 wide. This auxiliary cup can be operated with steam on lubricator and engine throttle open.

Write us for full descriptive pamphlets.

The Ohio Injector Co.

1437 Monadnock Block, Chicago, Ill.

Digitized by Google

Star Brass Manufacturing Co.

Sole

Manufacturers

of

Air Brake Inspectors' Gauges.

The above illustration represents a very useful article that we have recently produced for the assistance of the Air Brake Inspector to instantly determine the pressure or test the signal apparatus by attaching to the hose couplings of the rear coach, as it will fit either the brake or signal couplings. These features obviate the necessity of the inspector consulting the air gauge in the cab, and the great advantage that this very useful instrument affords will readily be seen. The Test Gauge is only 2½ in. in diameter and weighs less than one pound. They are exclusively made by us and prices will be forwarded upon application.

Also original and exclusive manufacturers of

Westinghouse Duplex Air and Locomotive Gauges

Fitted with our Patent Non-Corrosive Movement and Non-Setting corrugated Spring tubes

Open and Muffled Locomotive Pop Safety Valves, Extra Heavy Water Gauges, Gauge Cocks, Lubricators, Etc.

MAIN OFFICE AND WORKS

104-14 E. Dedham St. Boston, Mass.

BRANCHES

421 Fulton Building, Pittsburgh, Pa.

70 Cortland St., New York City

404 St. James St., Montreal, Canada

Digitized by Google

Railroad Men's Catechism

By Angus Sinclair Company

Contains complete examination course for Engineers and Firemen. One of the most useful helps ever offered to Railway men. Numerous illustrations, 200 pages, flexible cloth.

PRICE $1.00

Locomotive Engine Running and Management

By Angus Sinclair

A book that has probably helped more enginemen than any other. Practical, reliable and brought up-to-date. Twenty-first edition ready. **PRICE $2.00**

Twentieth Century Locomotives

By Angus Sinclair Company

It has 670 pages dealing with the designing, construction, repairing and operating of modern locomotives. Work shop operations, care and management of engines. Quick repairs on the road, shop tools, shop recipes, train resistance and power calculations, definitions and tables. Standard types of engines illustrated and described. Fully indexed. Most all round useful modern compendium of the locomotive.

PRICE $2.00

In addition to the above every railroad man should peruse

Railway and Locomotive Engineering

A high class illustrated monthly periodical universally acknowledged to be the most interesting and the best illustrated railway paper published. Keeps abreast of the latest improvements. Constantly describing and illustrating

New Appliances **New Methods** **New Features**

Sample Copies on Application

TWO DOLLARS PER ANNUM

Published by the

Angus Sinclair Company

114 Liberty Street **New York**

Digitized by Google

BRAKEMAN'S
AIR BRAKE AND SIGNAL COCK

For Controlling From Rear of Trains When Backing

THE methods of handling trains at terminals and passenger yards have entirely changed within a few years and it is now a universal practice that trains be **backed** into the station and from there to the yards. This makes it necessary to have them positively controlled from the rear end. It is also necessary to have a substitute for the engine bell, as a warning in passing into stations and yards.

The cut shows a device which is designed to fulfill these requirements. It is a combined plug-cock and alarm whistle (A) attached by a short length of hose or pipe to the train "pipe" of the rear car. The whistle is blown by pressing the button (B) shown in the cut, which allows air to pass through the hollow handle of the cock to whistle, which is shown on the end of the handle, blowing the same and giving the necessary alarm. **The air used for this purpose, on account of the design of the whistle valve, POSITIVELY does not affect the brake system.**

By moving the handle of the cock in either direction exhaust is made from the train pipe, through opening C, the brake set, and consequent positive control of the train given.

The device is also valuable in switching of freight trains, especially during the night or in thick weather, as the train by its use is under complete control from both ends.

SHERBURNE & CO.,

Sole Manufactures

53 Oliver Street, BOSTON, MASS., U. S. A.

Digitized by Google

The American Automatic Slack Adjuster

MANUFACTURED BY THE

AMERICAN BRAKE COMPANY

St. Louis, Mo., U. S. A

Digitized by Google

SAVE

LIVES
MONEY
Collisions

CHEAPER
AND
More Reliable

than OIL

Digitized by Google

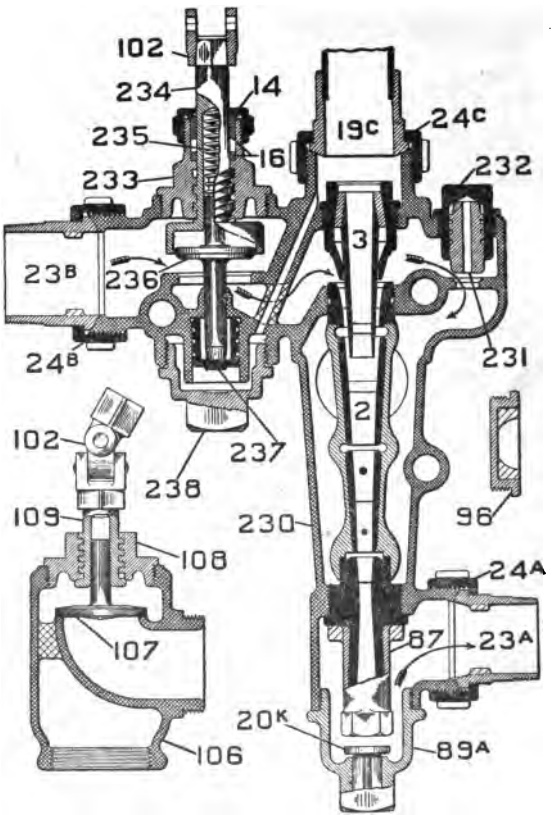

Sellers Non-Lifting Injector of 1908

Has all of the advantages and none of the disadvantages of the Lifting Injector

RE-STARTING - SELF ADJUSTING

When the steam valve is opened, water is admitted automatically. When the steam valve is closed, lazy cock closes automatically.

WM. SELLERS & CO., Incp. **Philadelphia, Pa.**

Digitized by Google

Digitized by Google

Digitized by Google

Digitized by Google

UNIVERSITY OF CALIFORNIA LIBRARY
BERKELEY

Return to desk from which borrowed.
This book is DUE on the last date stamped below.

21Nov'51MC

21NOV'51LU

17Nov'54DM

LU

DEC15 1966 65

RECEIVED

DEC 14'66-11 AM

LOAN DEPT.

LD 21-95m-11,'50(2877s16)476

Digitized by Google

YA 06843

TF420
C7
1910

382110

UNIVERSITY OF CALIFORNIA LIBRARY

Digitized by Google

Digitized by Google